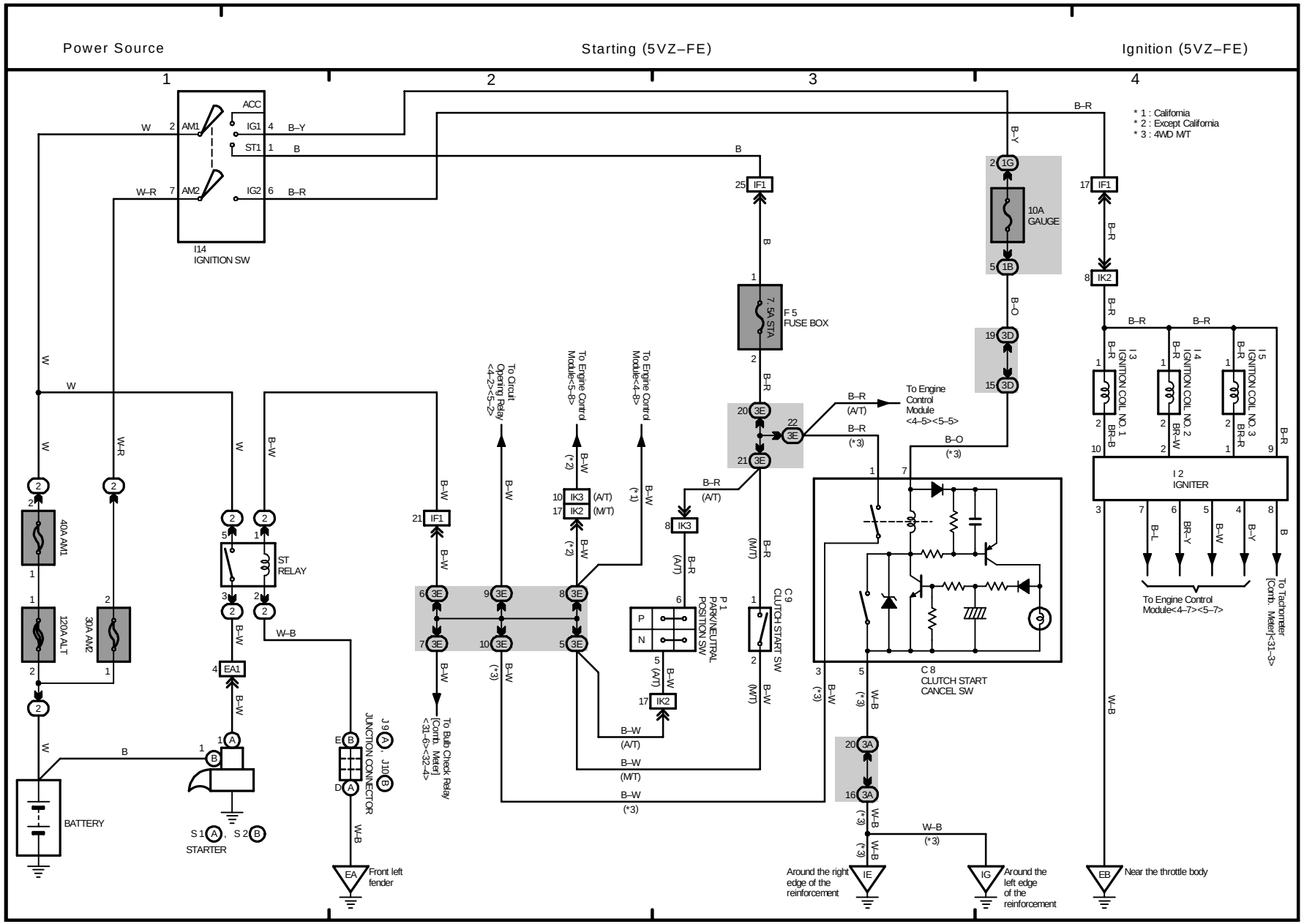
Power Source
Starting (5VZ–FE)
Ignition (5VZ–FE)
1
2
3
4
* 1 : California
* 2 : Except California
* 3 : 4WD M/T
I14
IGNITION SW
ACC
IG1
ST1
IG2
AM1
AM2
40A AM1
120A ALT
30A AM2
BATTERY
ST RELAY
EA1
STARTER
S1
S2
J9
J10
JUNCTION CONNECTOR
EA
Front left fender
To Circuit Opening Relay <4–2><5–2>
To Engine Control Module<5–8>
To Engine Control Module<4–8>
To Bulb Check Relay [Comb. Meter] <31–6><32–4>
IF1
7.5A STA
F 5
FUSE BOX
IK3
IK2
(A/T)
(M/T)
P 1
PARK/NEUTRAL POSITION SW
C 9
CLUTCH START SW
To Engine Control Module <4–5><5–5>
10A GAUGE
1G
1B
3D
3E
3A
C 8
CLUTCH START CANCEL SW
Around the right edge of the reinforcement
IE
IG
Around the left edge of the reinforcement
I 3
IGNITION COIL NO. 1
I 4
IGNITION COIL NO. 2
I 5
IGNITION COIL NO. 3
I 2
IGNITER
To Engine Control Module<4–7><5–7>
To Tachometer [Comb. Meter]<31–3>
EB
Near the throttle body

2 TOYOTA TACOMA

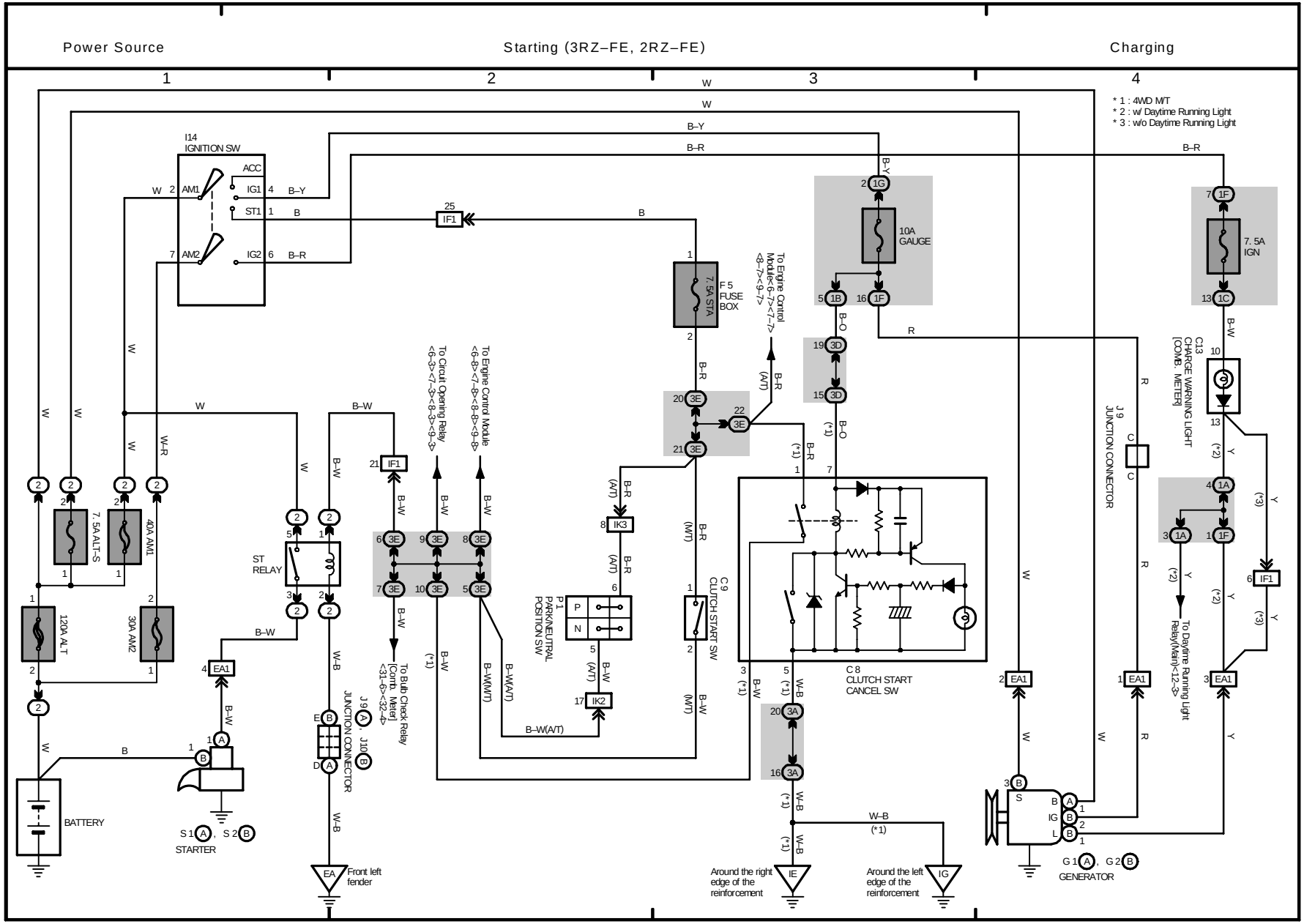

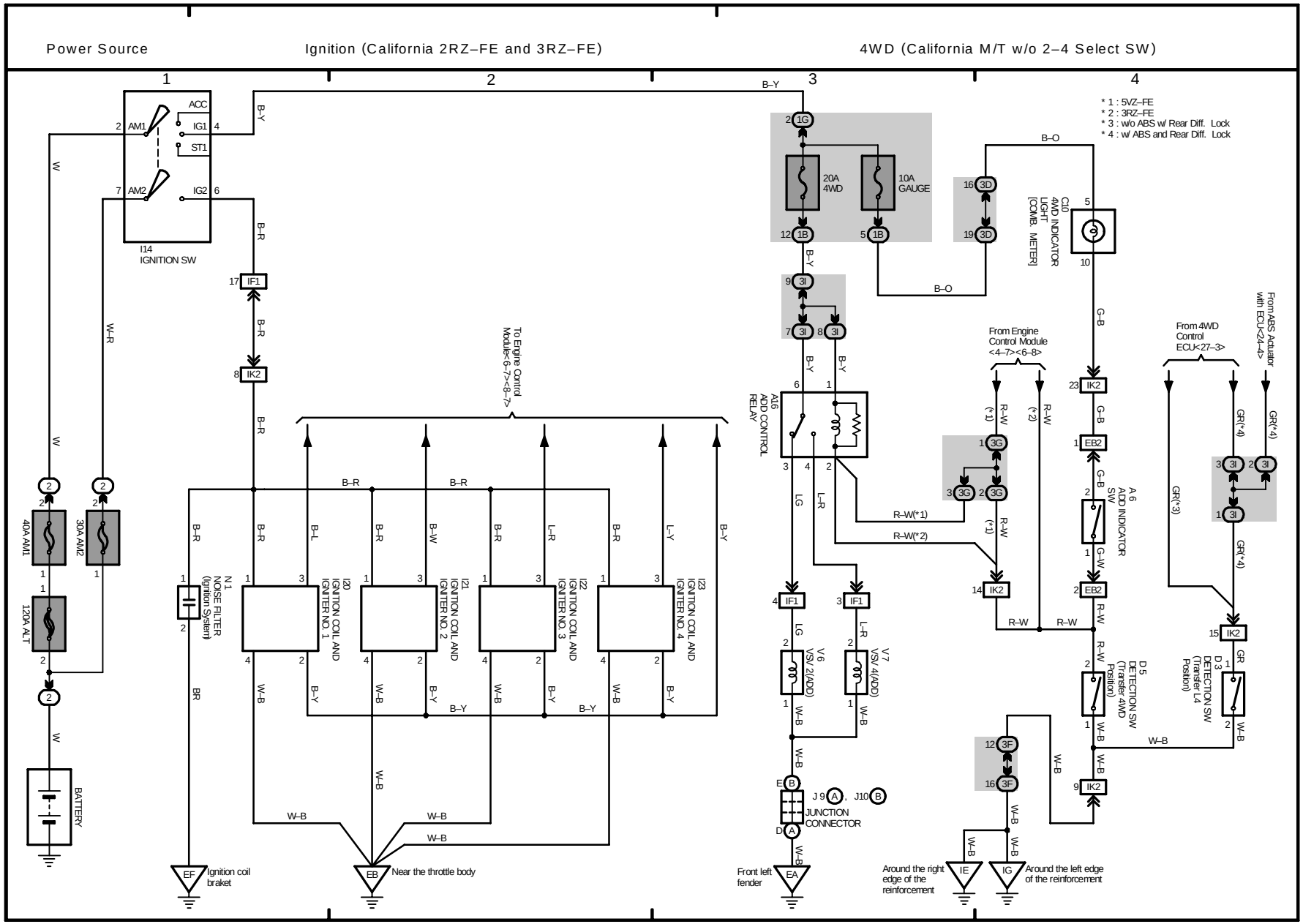
Power Source
Ignition (California 2RZ–FE and 3RZ–FE)
4WD (California M/T w/o 2–4 Select SW)
1
2
3
4
* 1 : 5VZ–FE
* 2 : 3RZ–FE
* 3 : w/o ABS w/ Rear Diff. Lock
* 4 : w/ ABS and Rear Diff. Lock
ACC
IG1
ST1
AM1
AM2
IG2
I14
IGNITION SW
IF1
IK2
To Engine Control Module<6–7><8–7>
I20
IGNITION COIL AND IGNITER NO. 1
I21
IGNITION COIL AND IGNITER NO. 2
I22
IGNITION COIL AND IGNITER NO. 3
I23
IGNITION COIL AND IGNITER NO. 4
N 1
NOISE FILTER (Ignition System)
40A AM1
30A AM2
120A ALT
BATTERY
EF
Ignition coil braket
EB
Near the throttle body
20A 4WD
10A GAUGE
A16
4WD CONTROL RELAY
V6
VSV 2(4WD)
V7
VSV 4(4WD)
JUNCTION CONNECTOR
Front left fender
EA
From Engine Control Module <4–7><6–8>
C10
4WD INDICATOR LIGHT [COMB METER]
A 6
4WD INDICATOR SW
D 5
DETECTION SW (Transfer 4WD Position)
D 3
DETECTION SW (Transfer L4 Position)
From 4WD Control ECU<27–3>
From ABS Actuator with ECU<24–4>
Around the right edge of the reinforcement
IE
IG
Around the left edge of the reinforcement

(Cont. next page)

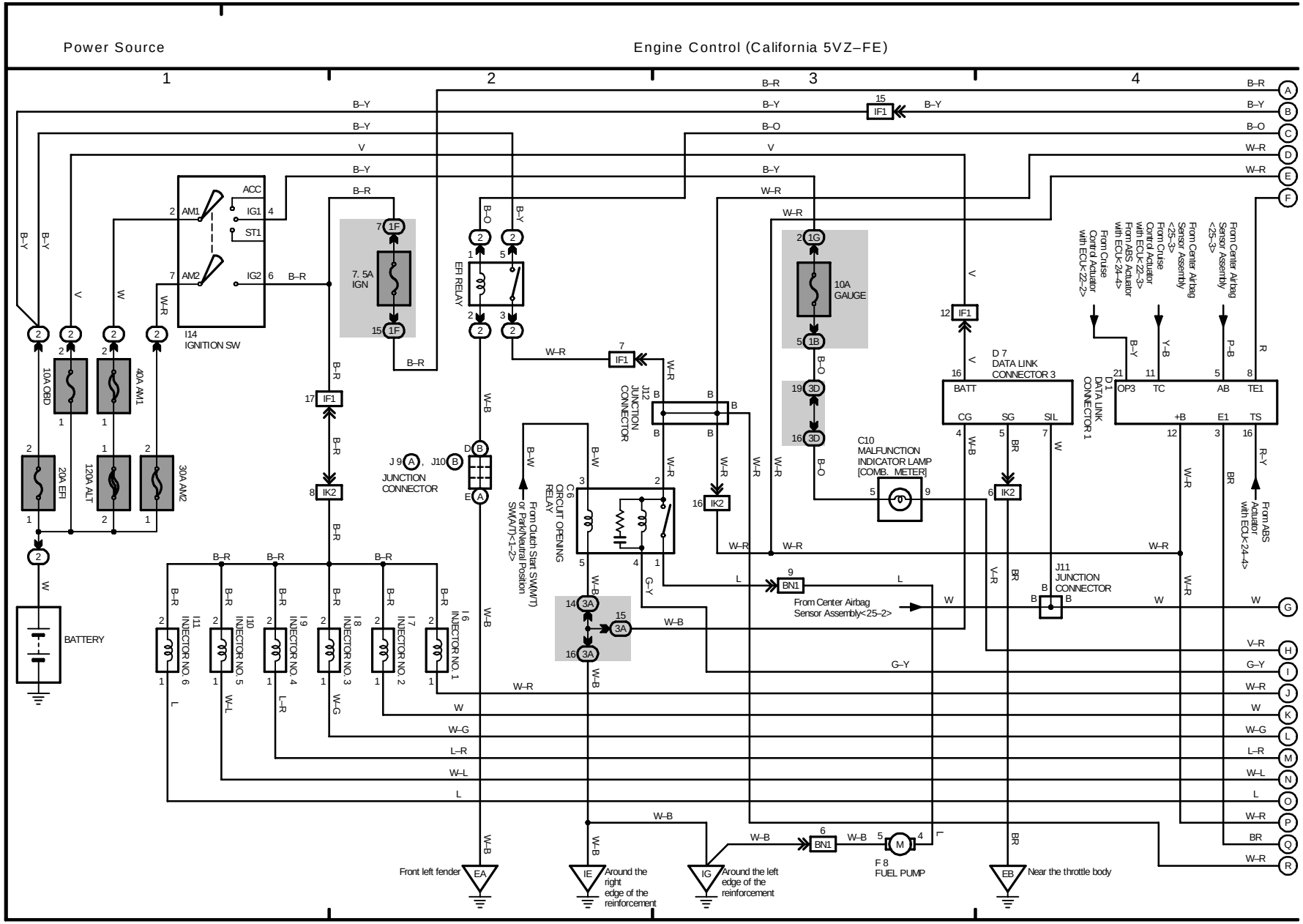

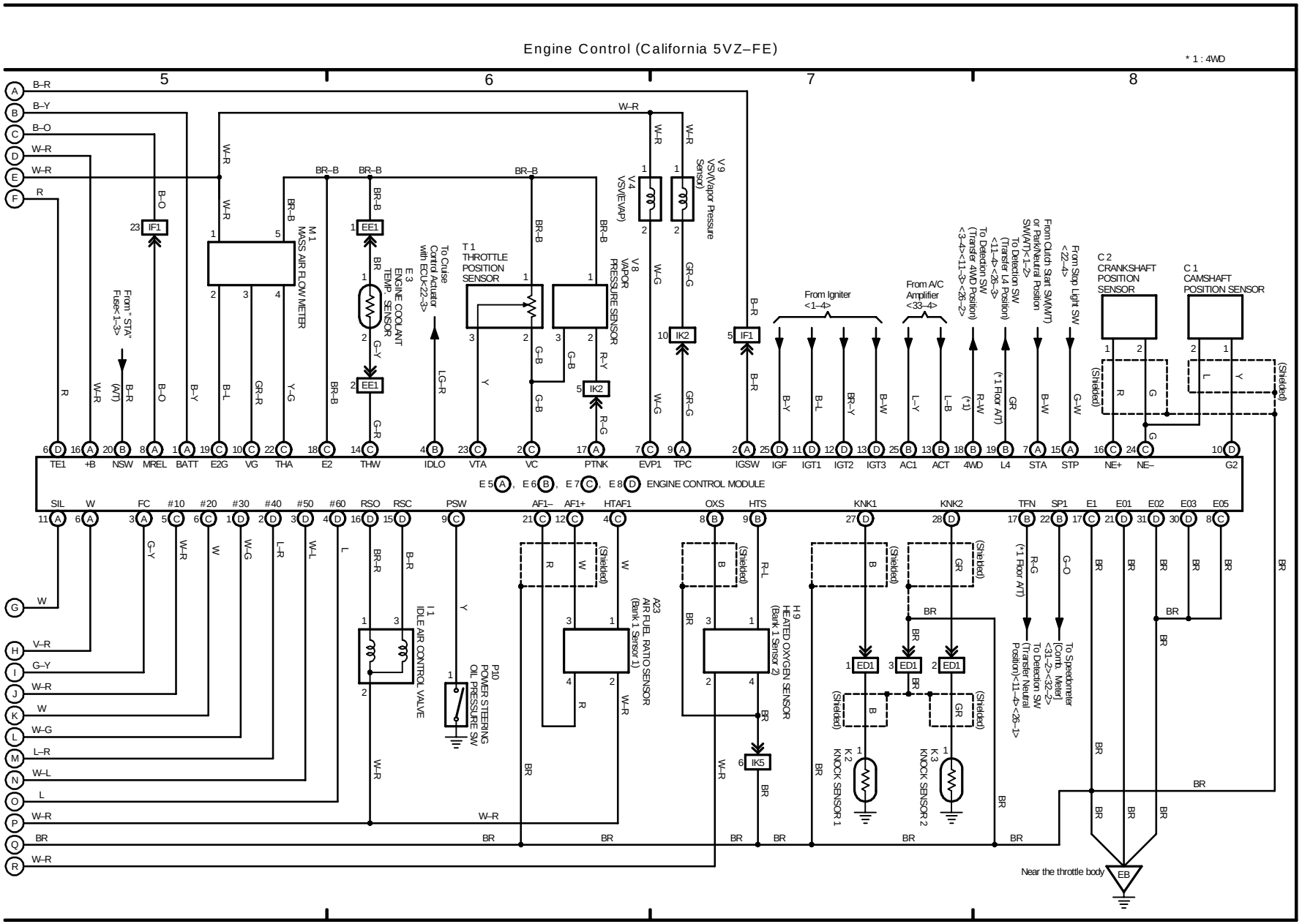
Engine Control (California 5VZ–FE)
* 1 : 4WD
5
6
7
8
M 1 MASS AIR FLOW METER
E 3 ENGINE COOLANT TEMP. SENSOR
To Cruise Control Actuator with ECU<22–3>
T 1 THROTTLE POSITION SENSOR
V 8 VAPOR PRESSURE SENSOR
V 4 VSV(EVAP)
V 9 VSV(Vapor Pressure Sensor)
From Igniter <1–4>
From A/C Amplifier <33–4>
To Detection SW (Transfer 4WD Position) <3–4><11–3><26–2>
To Detection SW (Transfer L4 Position) <11–4><26–3>
From Clutch Start SW(M/T) or Park/Neutral Position SW(A/T)<1–2>
From Stop Light SW <22–4>
C 2 CRANKSHAFT POSITION SENSOR
C 1 CAMSHAFT POSITION SENSOR
From "STA" Fuse<1–3>
TE1 +B NSW MREL BATT E2G VG THA E2 THW IDLO VTA VC PTNK EVP1 TPC IGSW IGF IGT1 IGT2 IGT3 AC1 ACT 4WD L4 STA STP NE+ NE– G2
E 5 (A), E 6 (B), E 7 (C), E 8 (D) ENGINE CONTROL MODULE
SIL W FC #10 #20 #30 #40 #50 #60 RSO RSC PSW AF1– AF1+ HTAF1 OXS HTS KNK1 KNK2 TFN SP1 E1 E01 E02 E03 E05
I 1 IDLE AIR CONTROL VALVE
P 10 POWER STEERING OIL PRESSURE SW
A 23 AIR FUEL RATIO SENSOR (Bank 1 Sensor 1)
H 9 HEATED OXYGEN SENSOR (Bank 1 Sensor 2)
K 2 KNOCK SENSOR 1
K 3 KNOCK SENSOR 2
To Speedometer (Comb. Meter) <31–2><32–2>
To Detection SW (Transfer Neutral Position)<11–4><26–1>
(*1 Floor A/T)
(Shielded)
Near the throttle body
EB

(Cont. next page)

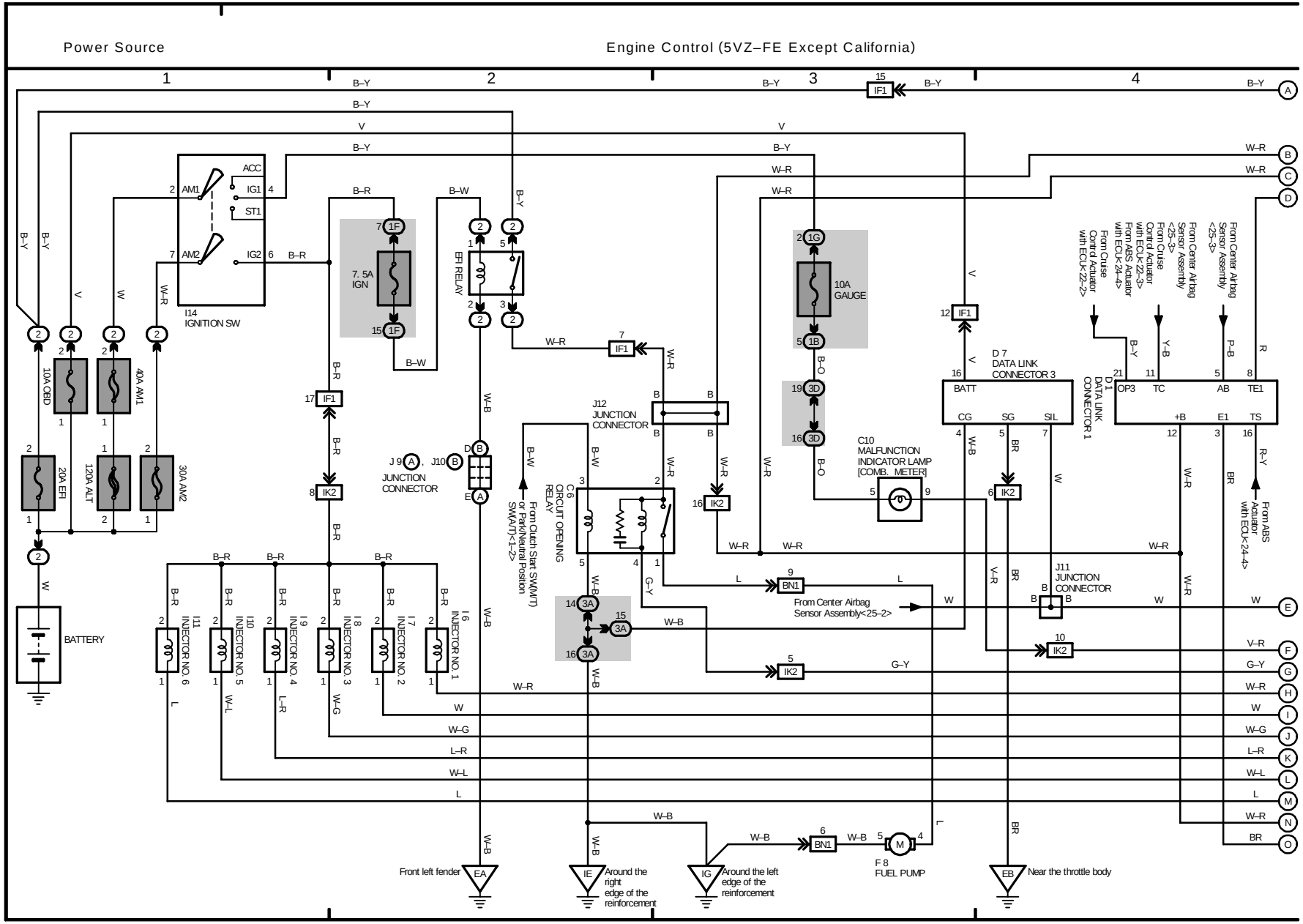

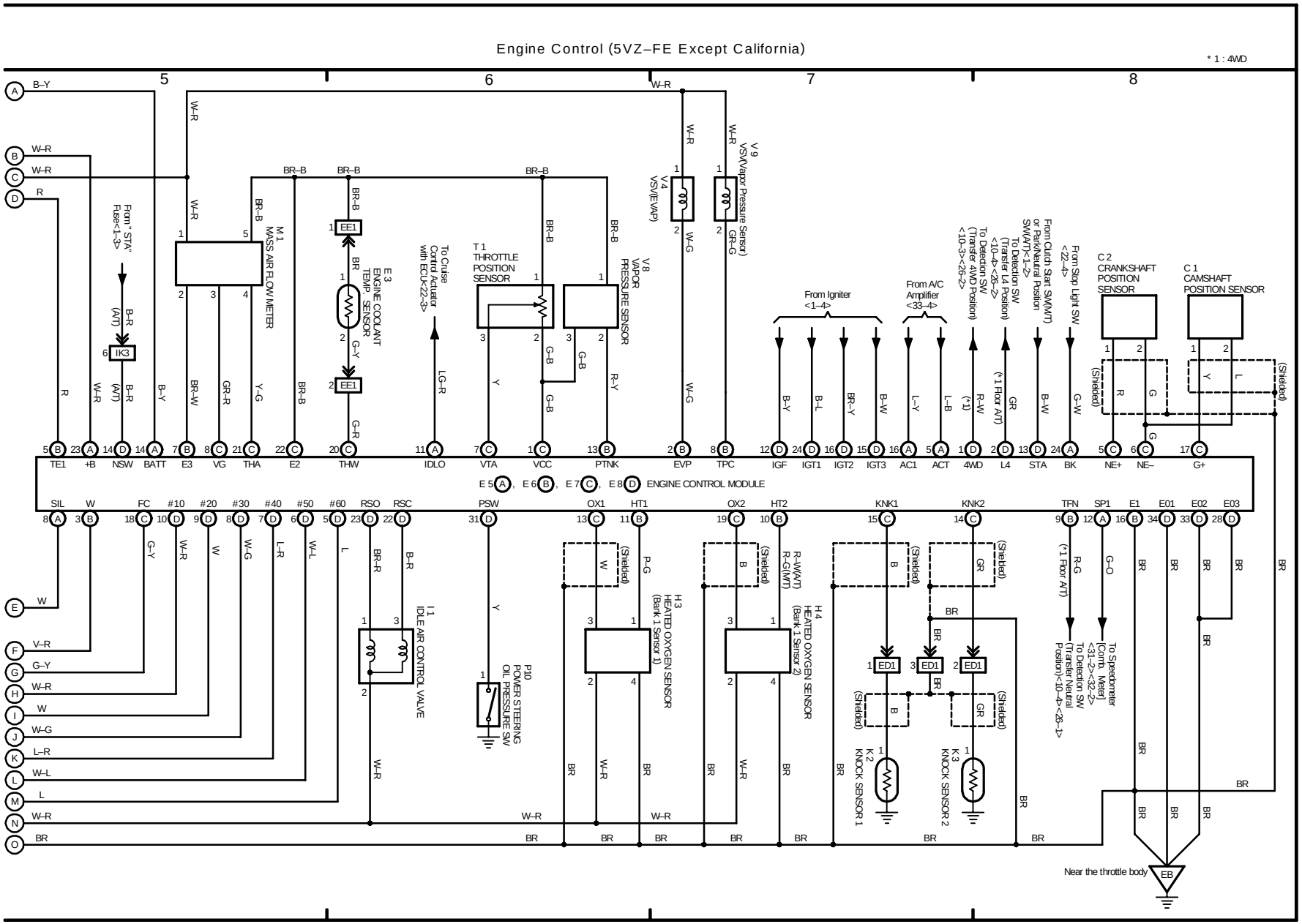
Engine Control (5VZ–FE Except California)
* 1 : 4WD
5
6
7
8
From " STA" Fuse<1–3>
IK3
M 1 MASS AIR FLOW METER
EE1
E 3 ENGINE COOLANT TEMP. SENSOR
To Cruise Control Actuator with ECU<22–3>
T 1 THROTTLE POSITION SENSOR
V 8 VAPOR PRESSURE SENSOR
V 4 VSV(EVAP)
V 9 VSV(Vapor Pressure Sensor)
From Igniter <1–4>
From A/C Amplifier <33–4>
To Detection SW (Transfer 4WD Position) <10–3><26–2>
To Detection SW (Transfer L4 Position) <10–4><26–2>
From Clutch Start SW(M/T) or Park/Neutral Position SW(A/T)<1–2>
From Stop Light SW <22–4>
C 2 CRANKSHAFT POSITION SENSOR
C 1 CAMSHAFT POSITION SENSOR
(Shielded)
TE1 +B NSW BATT E3 VG THA E2 THW IDLO VTA VCC PTNK EVP TPC IGF IGT1 IGT2 IGT3 AC1 ACT 4WD L4 STA BK NE+ NE– G+
E 5 (A), E 6 (B), E 7 (C), E 8 (D) ENGINE CONTROL MODULE
SIL W FC #10 #20 #30 #40 #50 #60 RSO RSC PSW OX1 HT1 OX2 HT2 KNK1 KNK2 TFN SP1 E1 E01 E02 E03
I 1 IDLE AIR CONTROL VALVE
P 10 POWER STEERING OIL PRESSURE SW
H 3 HEATED OXYGEN SENSOR (Bank 1 Sensor 1)
H 4 HEATED OXYGEN SENSOR (Bank 1 Sensor 2)
ED1
K 2 KNOCK SENSOR 1
K 3 KNOCK SENSOR 2
(*1 Floor A/T)
To Speedometer [Comb. Meter] <31–2><32–2>
To Detection SW (Transfer Neutral Position) <10–4><26–1>
Near the throttle body
EB

M OVERALL ELECTRICAL WIRING DIAGRAM

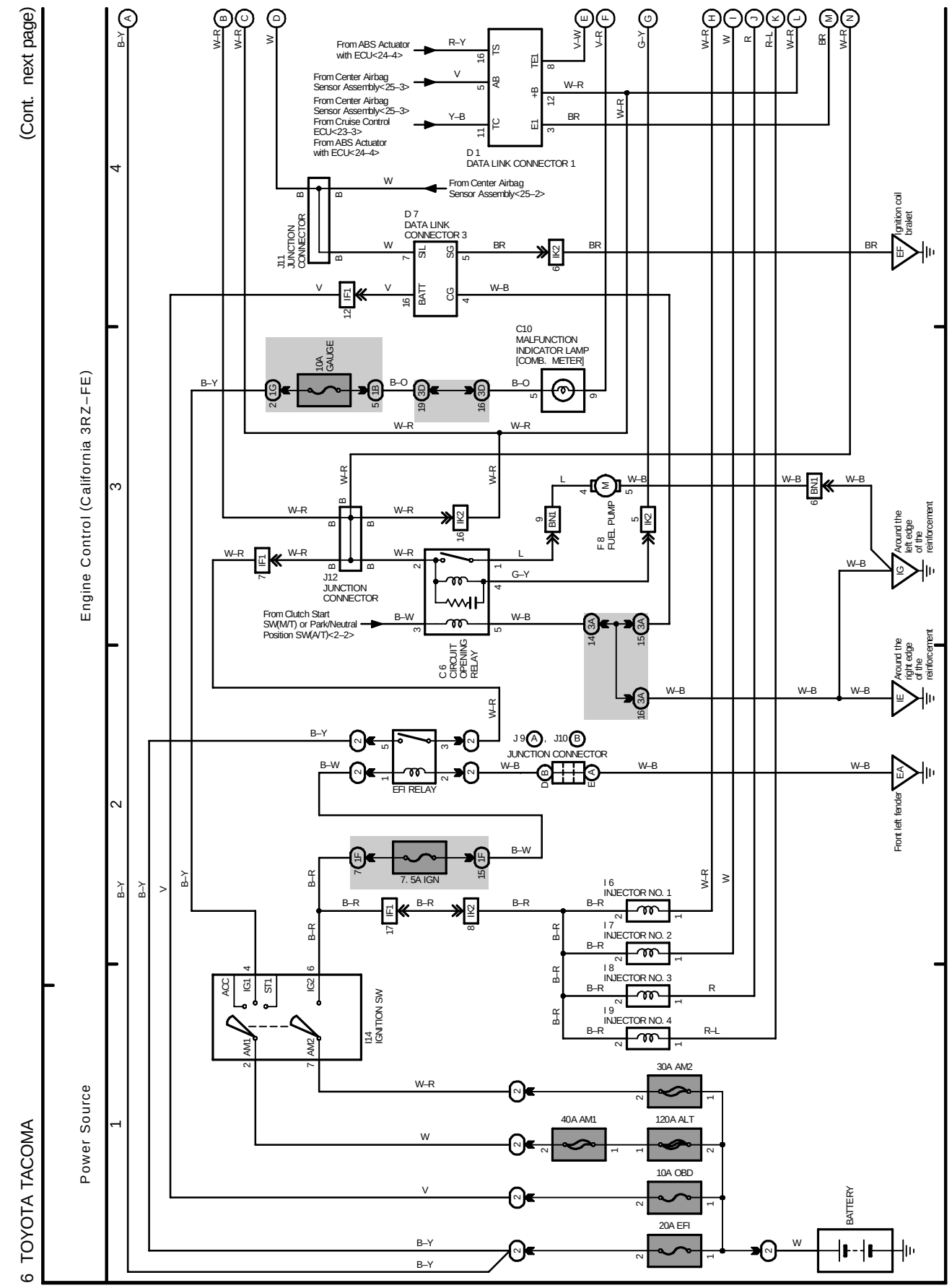

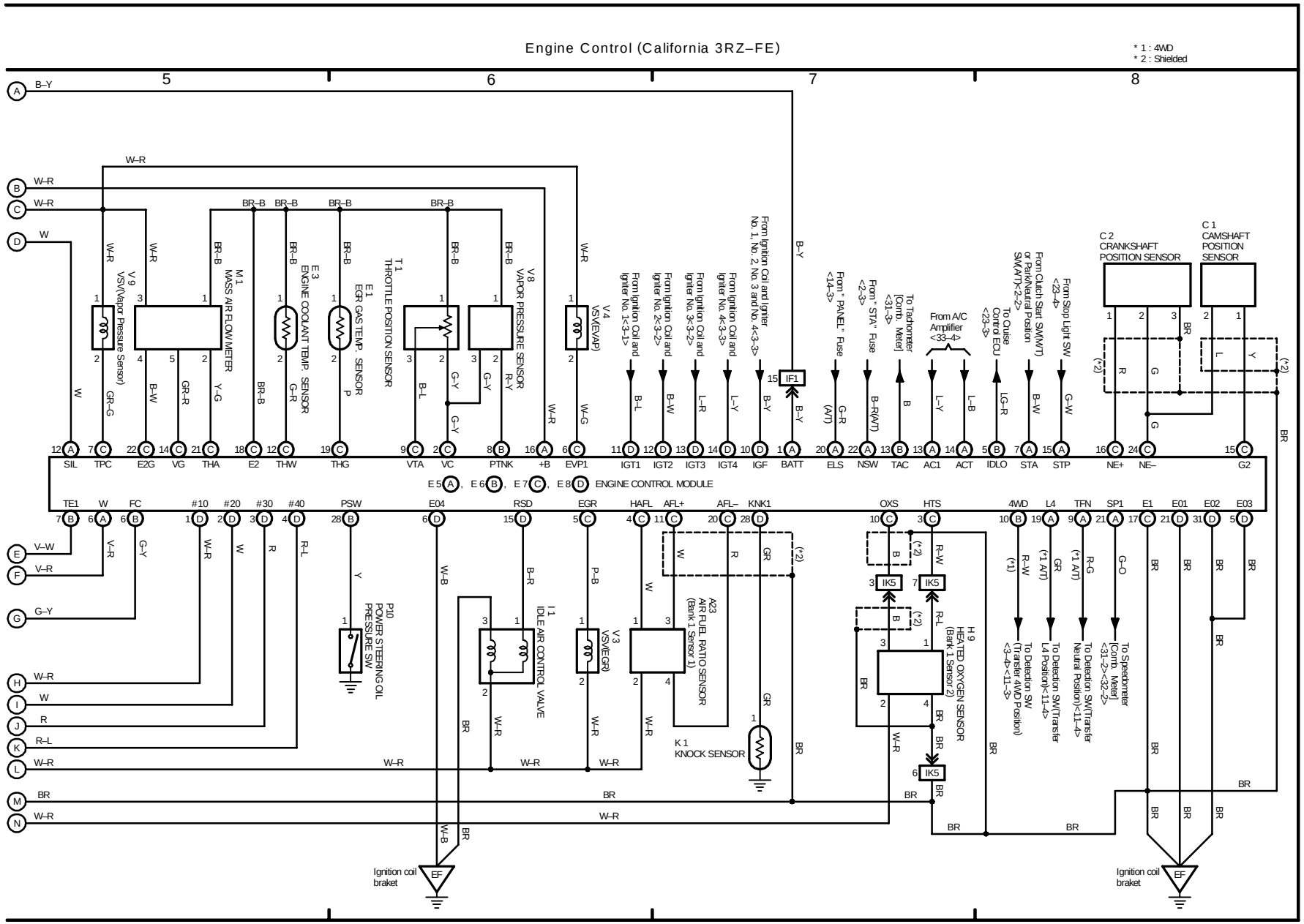
Engine Control (California 3RZ–FE)
* 1 : 4WD
* 2 : Shielded
5
6
7
8
V 9 VSV(Vapor Pressure Sensor)
M 1 MASS AIR FLOW METER
E 3 ENGINE COOLANT TEMP. SENSOR
E 1 EGR GAS TEMP. SENSOR
T 1 THROTTLE POSITION SENSOR
V 8 VAPOR PRESSURE SENSOR
V 4 VSV(EVAP)
From Ignition Coil and Igniter No. 1<3-1>
From Ignition Coil and Igniter No. 2<3-2>
From Ignition Coil and Igniter No. 3<3-2>
From Ignition Coil and Igniter No. 4<3-3>
From Ignition Coil and Igniter No. 1, No. 2, No. 3 and No. 4<3-3>
IF1
From "PANEL" Fuse <14-3>
From "STA" Fuse <2-3>
To Tachometer [Comb. Meter] <31-3>
From A/C Amplifier <33-4>
To Cruise Control ECU <23-3>
From Clutch Start SW(M/T) or Park/Neutral Position SW(A/T)<2-2>
From Stop Light SW <23-4>
C 2 CRANKSHAFT POSITION SENSOR
C 1 CAMSHAFT POSITION SENSOR
SIL TPC E2G VG THA E2 THW THG VTA VC PTNK +B EVP1 IGT1 IGT2 IGT3 IGT4 IGF BATT ELS NSW TAC AC1 ACT IDLO STA STP NE+ NE– G2
E 5 A, E 6 B, E 7 C, E 8 D ENGINE CONTROL MODULE
TE1 W FC #10 #20 #30 #40 PSW E04 RSD EGR HAFL AFL+ AFL– KNK1 OXS HTS 4WD L4 TFN SP1 E1 E01 E02 E03
P 10 POWER STEERING OIL PRESSURE SW
I 1 IDLE AIR CONTROL VALVE
V 3 VSV(EGR)
A 23 AIR FUEL RATIO SENSOR (Bank 1 Sensor 1)
K 1 KNOCK SENSOR
IK5
H 9 HEATED OXYGEN SENSOR (Bank 1 Sensor 2)
To Detection SW (Transfer 4WD Position) <3-4><11-3>
To Detection SW(Transfer L4 Position)<11-4>
To Detection SW(Transfer Neutral Position)<11-4>
To Speedometer [Comb. Meter] <31-2><32-2>
Ignition coil braket
EF

M OVERALL ELECTRICAL WIRING DIAGRAM

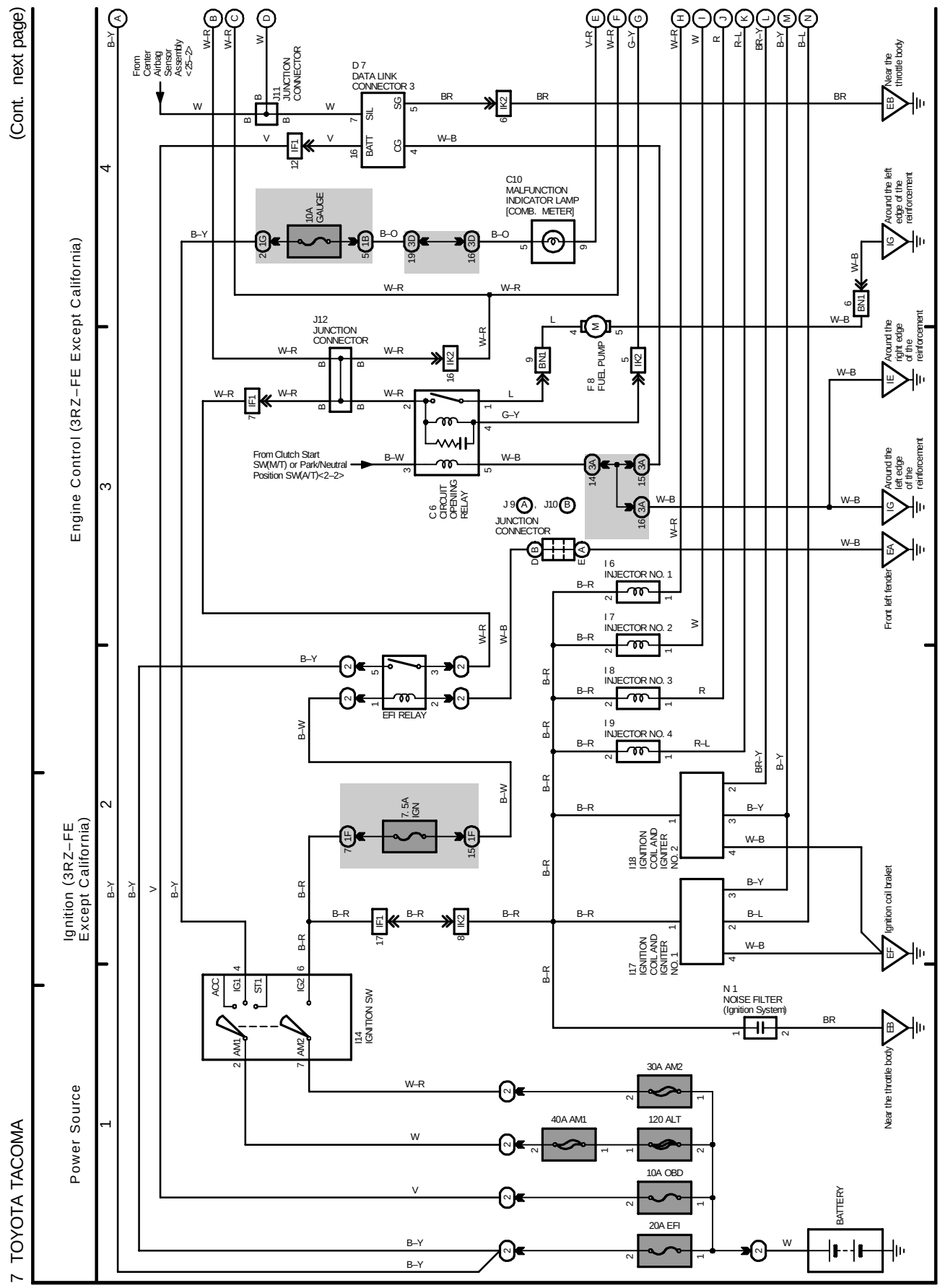

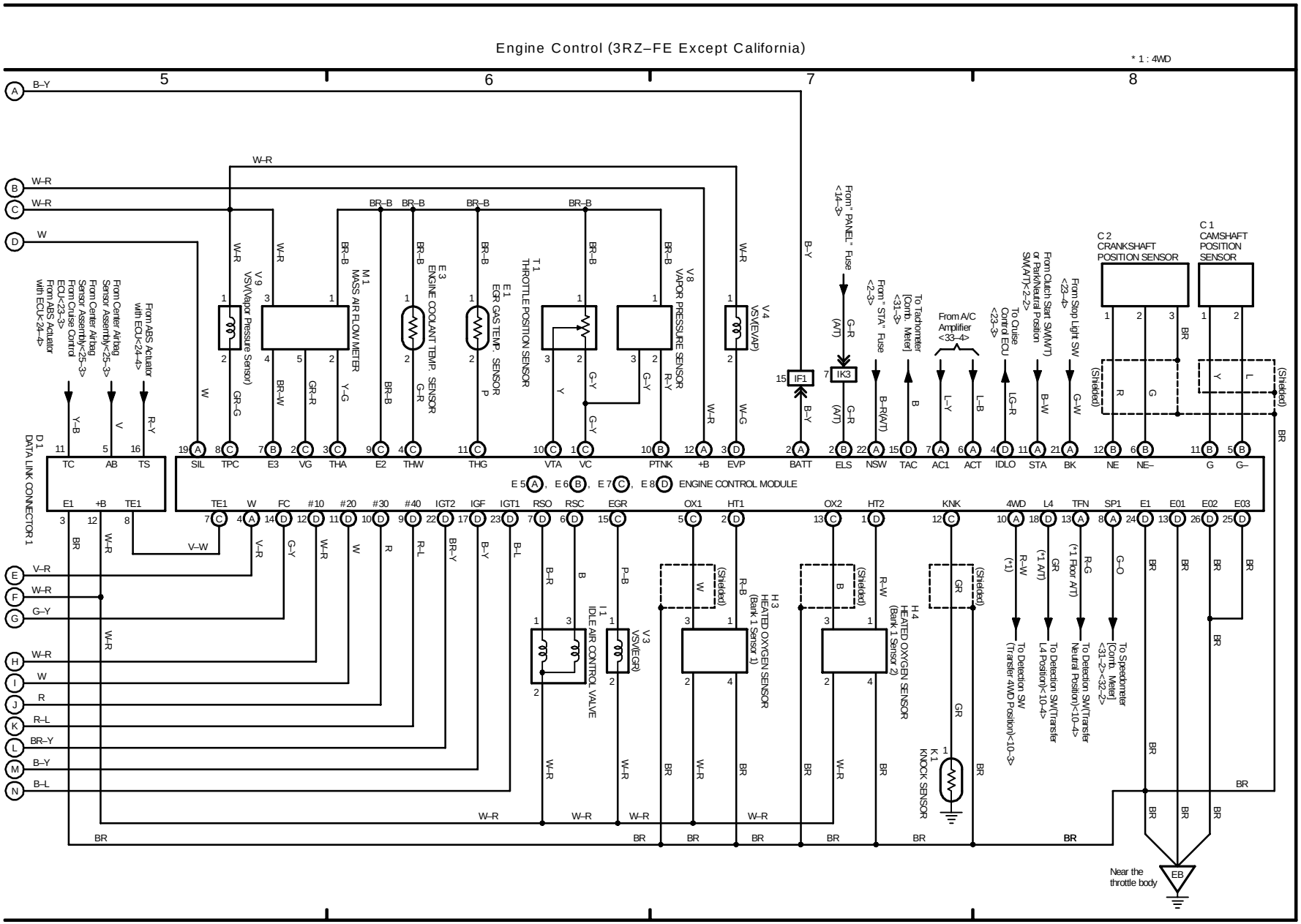
Engine Control (3RZ–FE Except California)
* 1 : 4WD
5
6
7
8
V 9 VSV(Vapor Pressure Sensor)
M 1 MASS AIR FLOW METER
E 3 ENGINE COOLANT TEMP. SENSOR
E 1 EGR GAS TEMP. SENSOR
T 1 THROTTLE POSITION SENSOR
V 8 VAPOR PRESSURE SENSOR
V 4 VSV(EVAP)
From " PANEL " Fuse <14–3>
From " STA " Fuse <2–3>
To Tachometer [Comb. Meter] <31–3>
From A/C Amplifier <33–4>
To Cruise Control ECU <23–3>
From Clutch Start SW(M/T) or Park/Neutral Position SW(A/T)<2–2>
From Stop Light SW <23–4>
C 2 CRANKSHAFT POSITION SENSOR
C 1 CAMSHAFT POSITION SENSOR
From ABS Actuator with ECU<24–4>
From Center Airbag Sensor Assembly<25–3>
From Center Airbag Sensor Assembly<25–3>
From Cruise Control ECU<23–3>
From ABS Actuator with ECU<24–4>
D 1 DATA LINK CONNECTOR 1
TC AB TS
SIL TPC E3 VG THA E2 THW THG VTA VC PTNK +B EVP BATT ELS NSW TAC AC1 ACT IDLO STA BK NE NE– G G–
E 5 A, E 6 B, E 7 C, E 8 D ENGINE CONTROL MODULE
E1 +B TE1 TE1 W FC #10 #20 #30 #40 IGT2 IGF IGT1 RSO RSC EGR OX1 HT1 OX2 HT2 KNK 4WD L4 TFN SP1 E1 E01 E02 E03
I 1 IDLE AIR CONTROL VALVE
V 3 VSV(EGR)
H 3 HEATED OXYGEN SENSOR (Bank 1 Sensor 1)
H 4 HEATED OXYGEN SENSOR (Bank 1 Sensor 2)
K 1 KNOCK SENSOR
To Detection SW (Transfer 4WD Position)<10–3>
To Detection SW (Transfer L4 Position)<10–4>
To Detection SW(Transfer Neutral Position)<10–4>
To Speedometer [Comb. Meter] <31–2><32–2>
Near the throttle body
EB

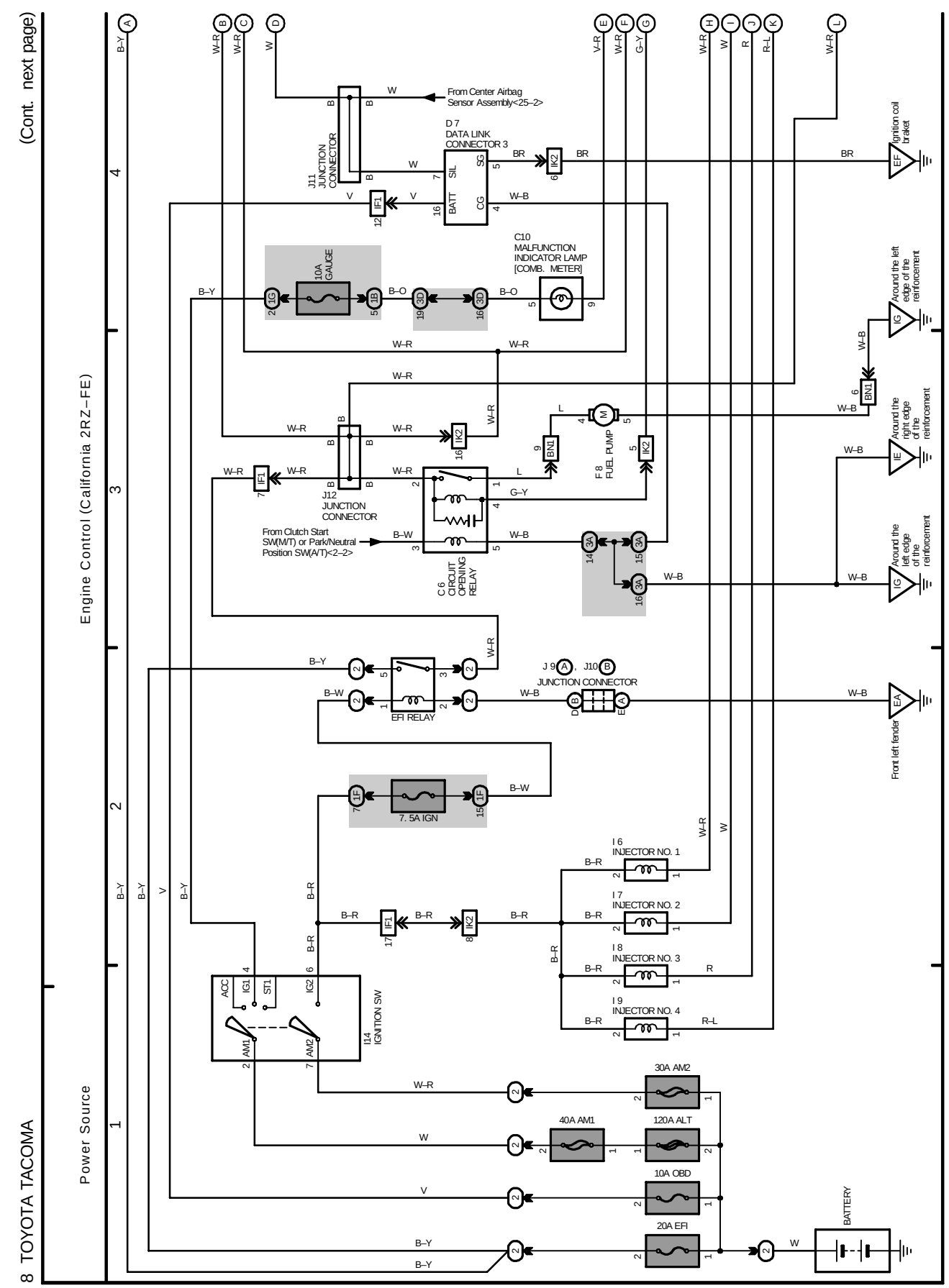
(Cont. next page)
Engine Control (California 2RZ–FE)
Power Source
From Center Airbag Sensor Assembly<25–2>
D 7 DATA LINK CONNECTOR 3
J11 JUNCTION CONNECTOR
C10 MALFUNCTION INDICATOR LAMP [COMB. METER]
10A GAUGE
Ignition coil braket
Around the left edge of the reinforcement
Around the right edge of the reinforcement
F 8 FUEL PUMP
J12 JUNCTION CONNECTOR
From Clutch Start SW(M/T) or Park/Neutral Position SW(A/T)<2–2>
C 6 CIRCUIT OPENING RELAY
EFI RELAY
J 9 A, J10 B JUNCTION CONNECTOR
Front left fender
7. 5A IGN
I 6 INJECTOR NO. 1
I 7 INJECTOR NO. 2
I 8 INJECTOR NO. 3
I 9 INJECTOR NO. 4
I14 IGNITION SW
30A AM2
40A AM1
120A ALT
10A OBD
20A EFI
BATTERY

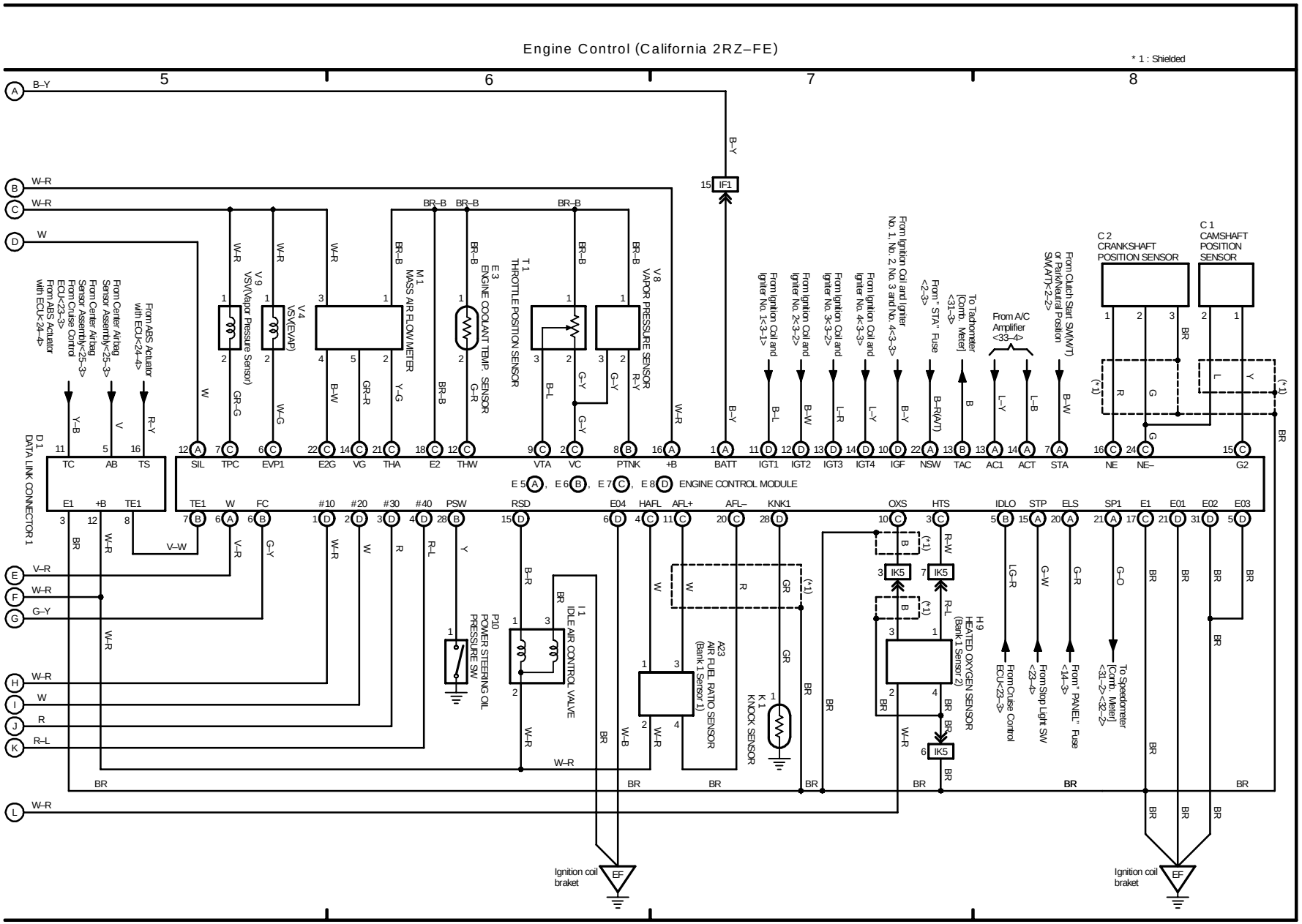
Engine Control (California 2RZ–FE)
* 1 : Shielded
5
6
7
8
D 1 DATA LINK CONNECTOR 1
TC AB TS
E1 +B TE1
From ABS Actuator with ECU<24–4>
From Center Airbag Sensor Assembly<25–3>
From Center Airbag Sensor Assembly<25–3>
From Cruise Control ECU<23–3>
From ABS Actuator with ECU<24–4>
V 9 VSV(Vapor Pressure Sensor)
V 4 VSV(EVAP)
M 1 MASS AIR FLOW METER
E 3 ENGINE COOLANT TEMP. SENSOR
T 1 THROTTLE POSITION SENSOR
V 8 VAPOR PRESSURE SENSOR
IF1
From Ignition Coil and Igniter No. 1<3–1>
From Ignition Coil and Igniter No. 2<3–2>
From Ignition Coil and Igniter No. 3<3–2>
From Ignition Coil and Igniter No. 4<3–3>
From Ignition Coil and Igniter No. 1, No. 2, No. 3 and No. 4<3–3>
From " STA " Fuse <2–3>
To Tachometer [Comb. Meter] <31–3>
From A/C Amplifier <33–4>
From Clutch Start SW(M/T) or Park/Neutral Position SW(A/T)<2–2>
C 2 CRANKSHAFT POSITION SENSOR
C 1 CAMSHAFT POSITION SENSOR
SIL TPC EVP1 E2G VG THA E2 THW VTA VC PTNK +B BATT IGT1 IGT2 IGT3 IGT4 IGF NSW TAC AC1 ACT STA NE NE– G2
E 5 (A), E 6 (B), E 7 (C), E 8 (D) ENGINE CONTROL MODULE
TE1 W FC #10 #20 #30 #40 PSW RSD E04 HAFL AFL+ AFL– KNK1 OXS HTS IDLO STP ELS SP1 E1 E01 E02 E03
P 10 POWER STEERING OIL PRESSURE SW
I 1 IDLE AIR CONTROL VALVE
A 23 AIR FUEL RATIO SENSOR (Bank 1 Sensor 1)
K 1 KNOCK SENSOR
IK5
H 9 HEATED OXYGEN SENSOR (Bank 1 Sensor 2)
From Cruise Control ECU<23–3>
From Stop Light SW <23–4>
From " PANEL " Fuse <14–3>
To Speedometer [Comb. Meter] <31–2> <32–2>
Ignition coil braket
EF
Ignition coil braket
EF

M OVERALL ELECTRICAL WIRING DIAGRAM

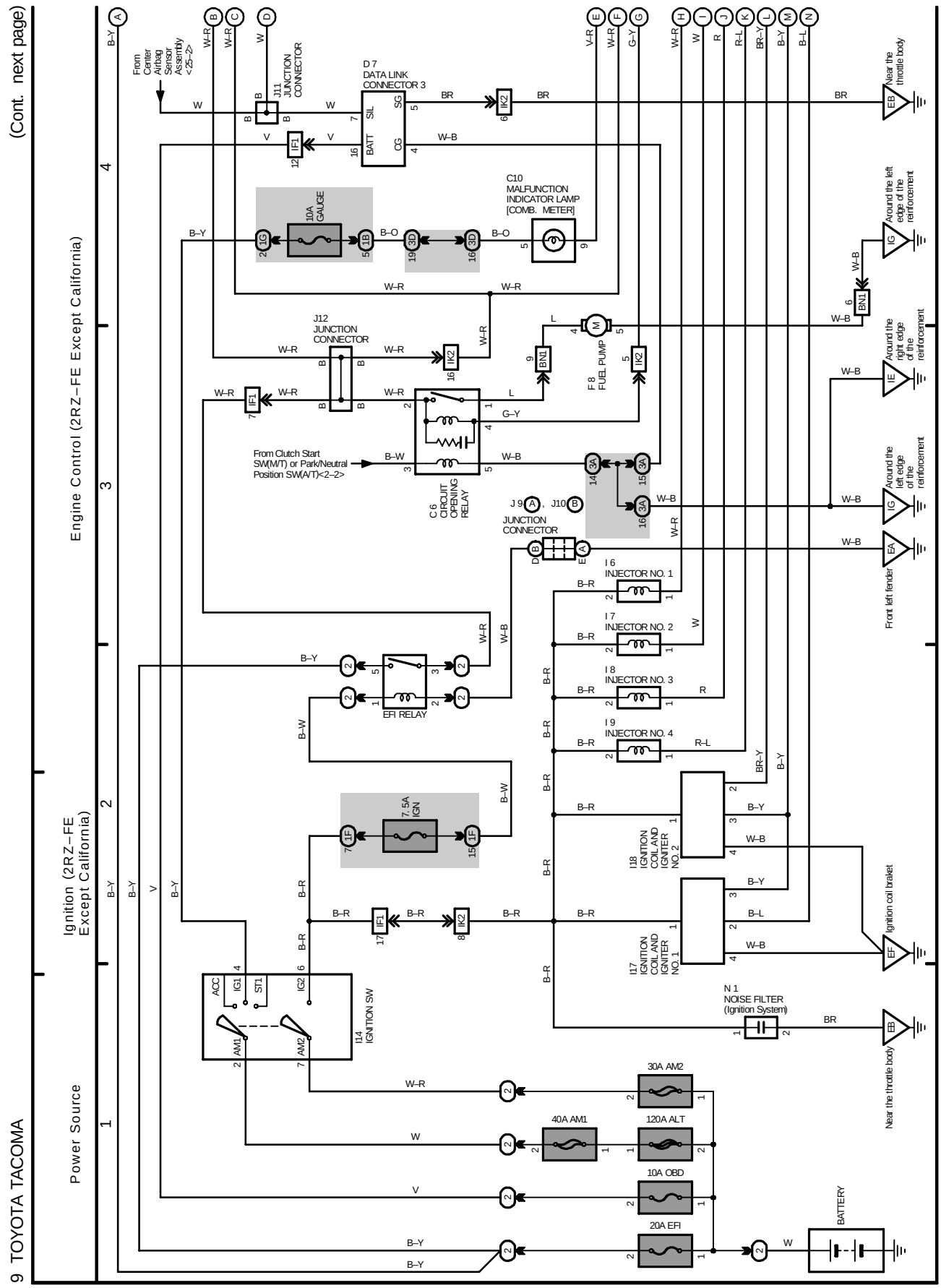

Engine Control (2RZ–FE Except California)

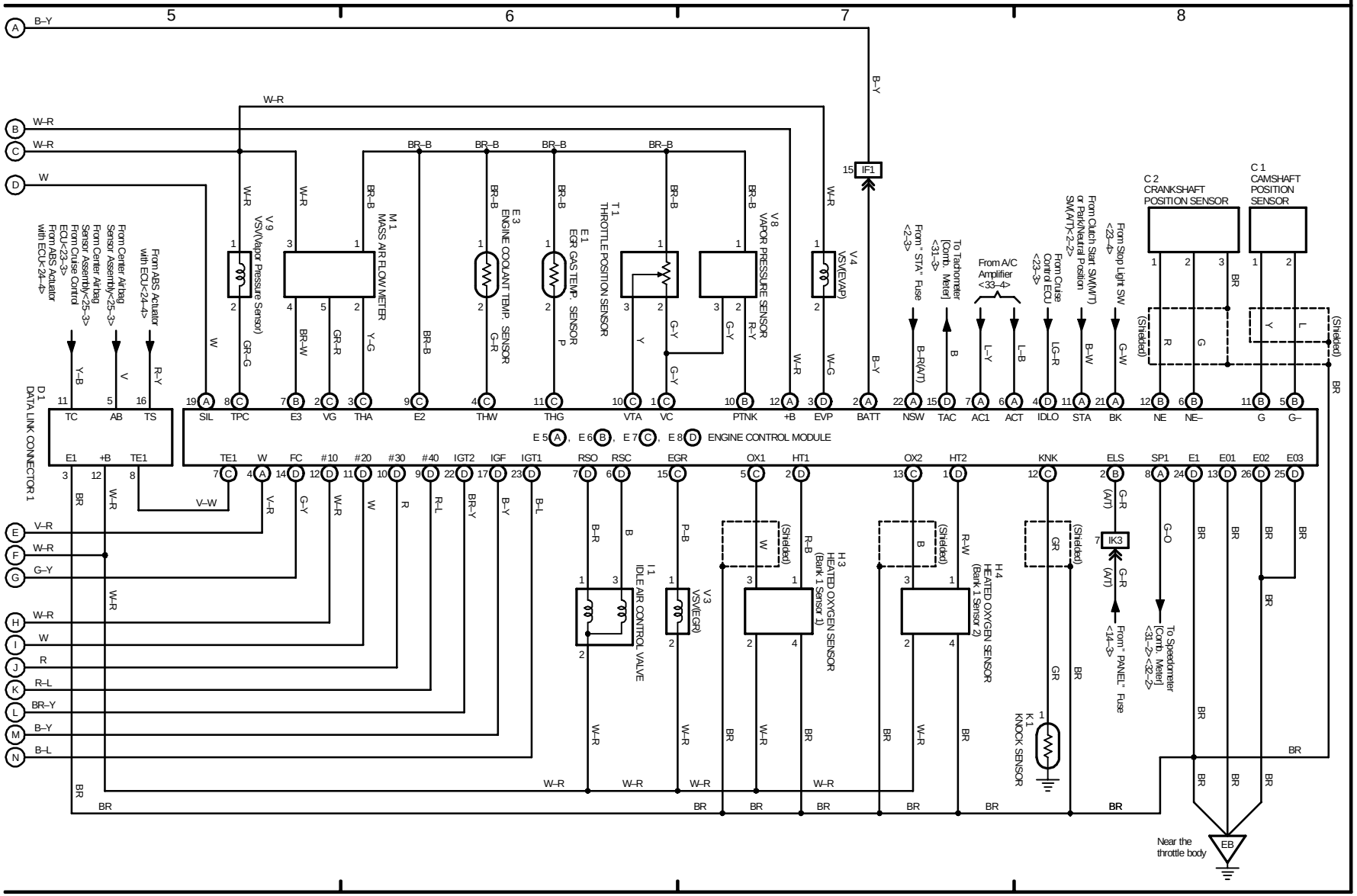

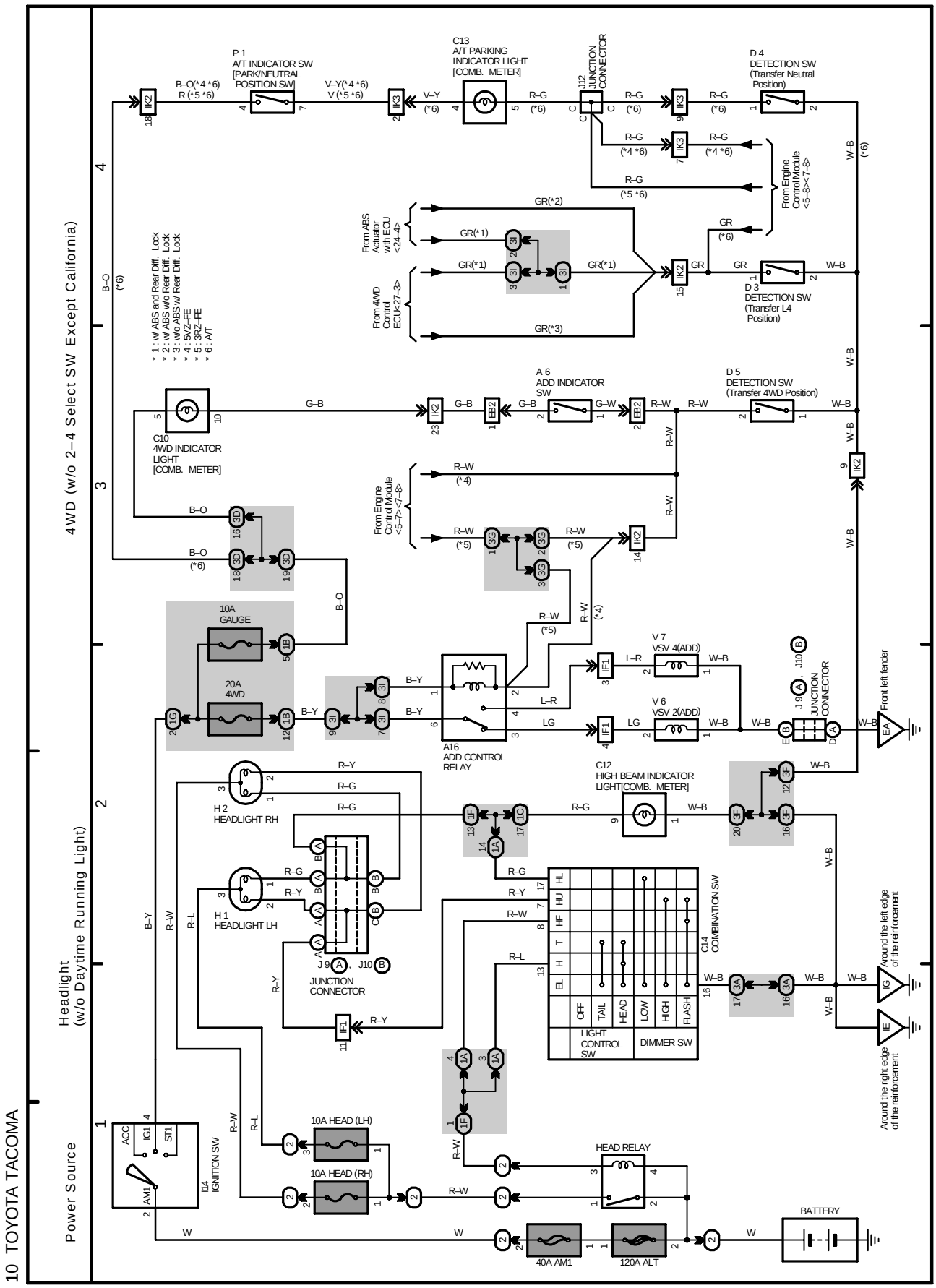
4WD (w/o 2–4 Select SW Except California)
Headlight (w/o Daytime Running Light)
Power Source
P 1 A/T INDICATOR SW [PARK/NEUTRAL POSITION SW]
C13 A/T PARKING INDICATOR LIGHT [COMB. METER]
J12 JUNCTION CONNECTOR
D 4 DETECTION SW (Transfer Neutral Position)
From Engine Control Module <5–8><7–8>
From ABS Actuator with ECU <24–4>
From 4WD Control ECU<27–3>
D 3 DETECTION SW (Transfer L4 Position)
* 1 : w/ ABS and Rear Diff. Lock
* 2 : w/ ABS w/o Rear Diff. Lock
* 3 : w/o ABS w/ Rear Diff. Lock
* 4 : 5VZ-FE
* 5 : 3RZ-FE
* 6 : A/T
C10 4WD INDICATOR LIGHT [COMB. METER]
A 6 ADD INDICATOR SW
D 5 DETECTION SW (Transfer 4WD Position)
10A GAUGE
20A 4WD
V 7 VSV 4(ADD)
V 6 VSV 2(ADD)
A16 ADD CONTROL RELAY
J 9 JUNCTION CONNECTOR
From left fender
H 2 HEADLIGHT RH
H 1 HEADLIGHT LH
C12 HIGH BEAM INDICATOR LIGHT[COMB. METER]
C14 COMBINATION SW
LIGHT CONTROL SW
DIMMER SW
OFF
TAIL
HEAD
LOW
HIGH
FLASH
Around the left edge of the reinforcement
Around the right edge of the reinforcement
I14 IGNITION SW
ACC
IG1
ST1
AM1
10A HEAD (LH)
10A HEAD (RH)
HEAD RELAY
40A AM1
120A ALT
BATTERY

Power Source

4WD (California A/T w/o 2–4 Select SW)

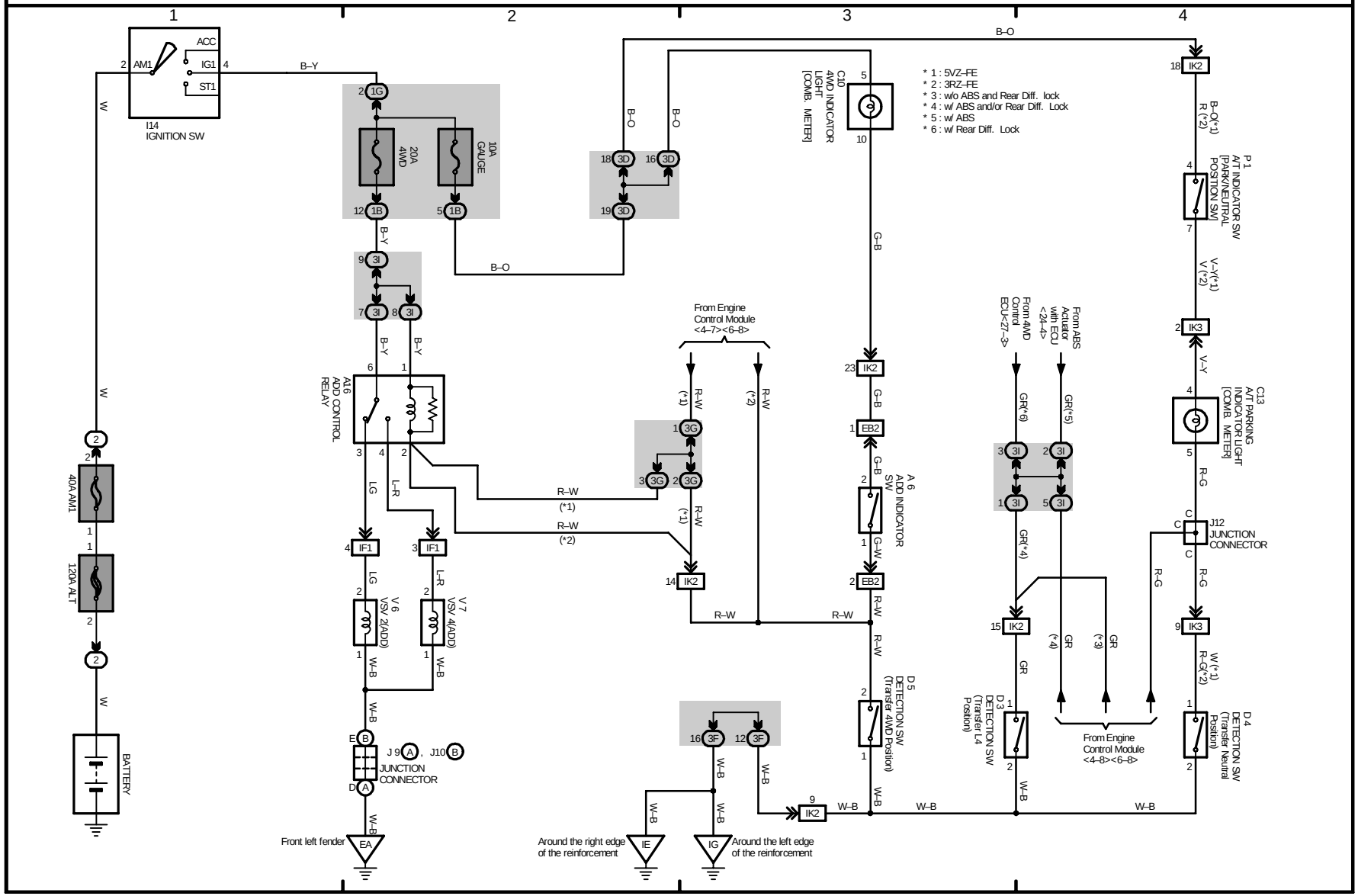

M

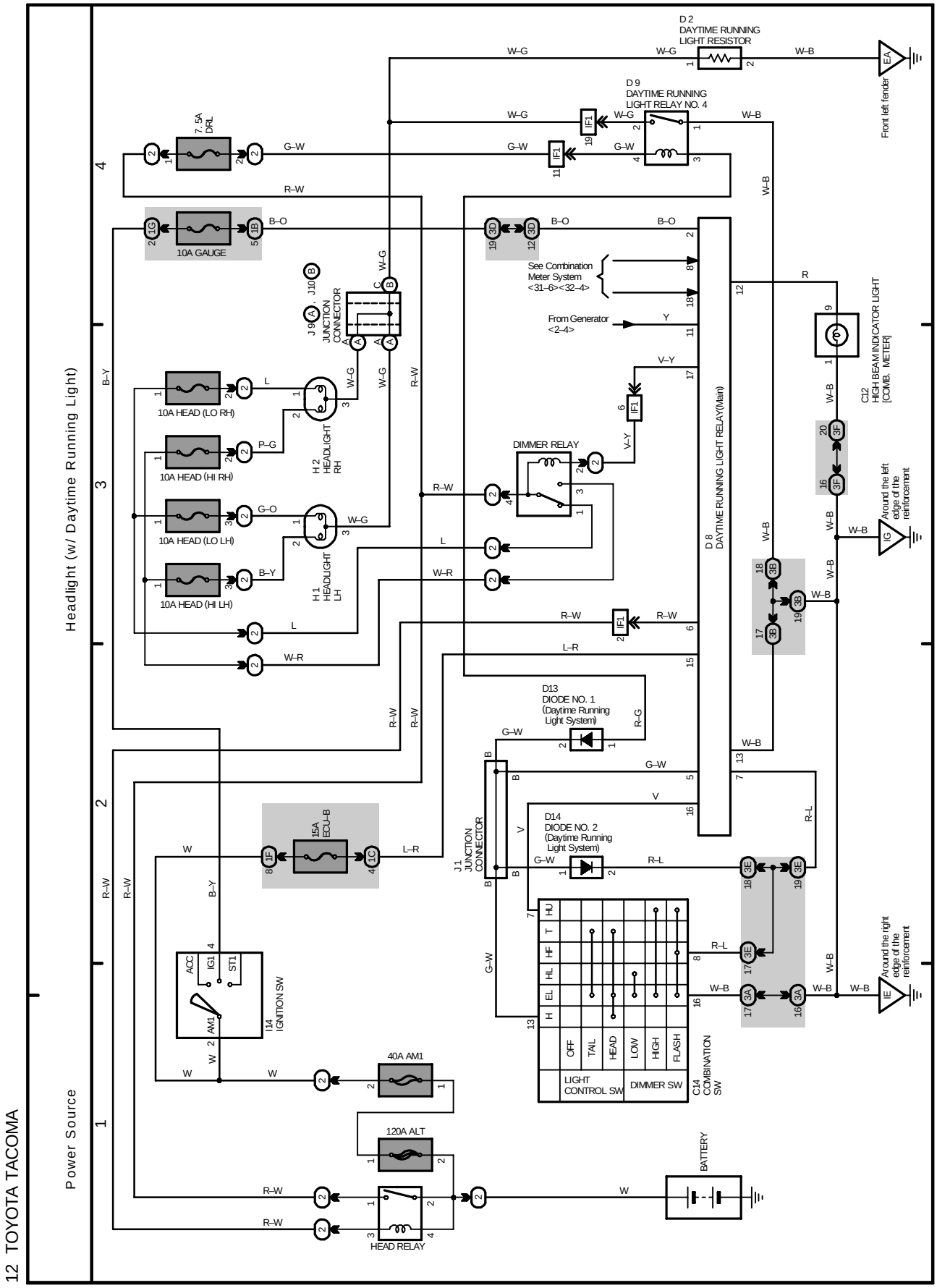
Headlight (w/ Daytime Running Light)
Power Source
D 2
DAYTIME RUNNING
LIGHT RESISTOR
D 9
DAYTIME RUNNING
LIGHT RELAY NO. 4
Front left fender
7.5A
DRL
10A GAUGE
See Combination
Meter System
<31–6><32–4>
From Generator
<2–4>
JUNCTION
CONNECTOR
10A HEAD (LO RH)
10A HEAD (HI RH)
10A HEAD (LO LH)
10A HEAD (HI LH)
H 2
HEADLIGHT
RH
H 1
HEADLIGHT
LH
DIMMER RELAY
D 8
DAYTIME RUNNING LIGHT RELAY(Main)
C12
HIGH BEAM INDICATOR LIGHT
[COMB. METER]
Around the left
edge of the
reinforcement
Around the right
edge of the
reinforcement
D13
DIODE NO. 1
(Daytime Running
Light System)
D14
DIODE NO. 2
(Daytime Running
Light System)
15A
ECU-B
I14
IGNITION SW
ACC
IG1
ST1
AM1
40A AM1
120A ALT
HEAD RELAY
BATTERY
LIGHT
CONTROL SW
DIMMER SW
OFF
TAIL
HEAD
LOW
HIGH
FLASH
C14
COMBINATION
SW

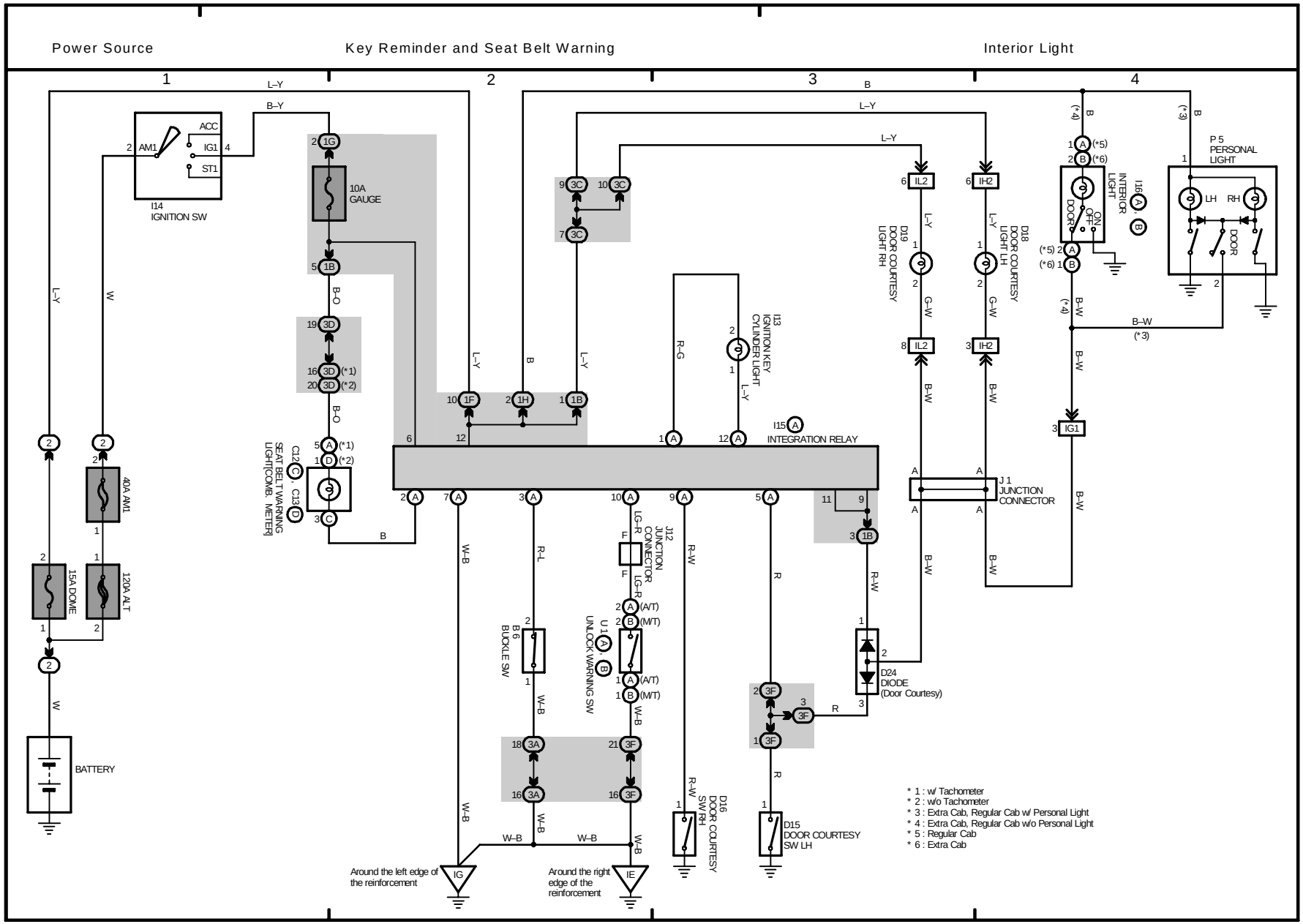
Power Source
Key Reminder and Seat Belt Warning
Interior Light
1
2
3
4
I14
IGNITION SW
ACC
IG1
ST1
AM1
10A
GAUGE
40A AM1
15A DOME
120A ALT
BATTERY
SEAT BELT WARNING LIGHT(COMB. METER)
C12
C13
I13
IGNITION KEY CYLINDER LIGHT
I15
INTEGRATION RELAY
J12
JUNCTION CONNECTOR
B 6
BUCKLE SW
U 1
UNLOCK WARNING SW
D19
DOOR COURTESY LIGHT RH
D18
DOOR COURTESY LIGHT LH
J 1
JUNCTION CONNECTOR
D24
DIODE
(Door Courtesy)
D16
DOOR COURTESY SW RH
D15
DOOR COURTESY SW LH
I16
INTERIOR LIGHT
DOOR
ON
OFF
P 5
PERSONAL LIGHT
LH
RH
Around the left edge of the reinforcement
IG
Around the right edge of the reinforcement
IE
* 1 : w/ Tachometer
* 2 : w/o Tachometer
* 3 : Extra Cab, Regular Cab w/ Personal Light
* 4 : Extra Cab, Regular Cab w/o Personal Light
* 5 : Regular Cab
* 6 : Extra Cab

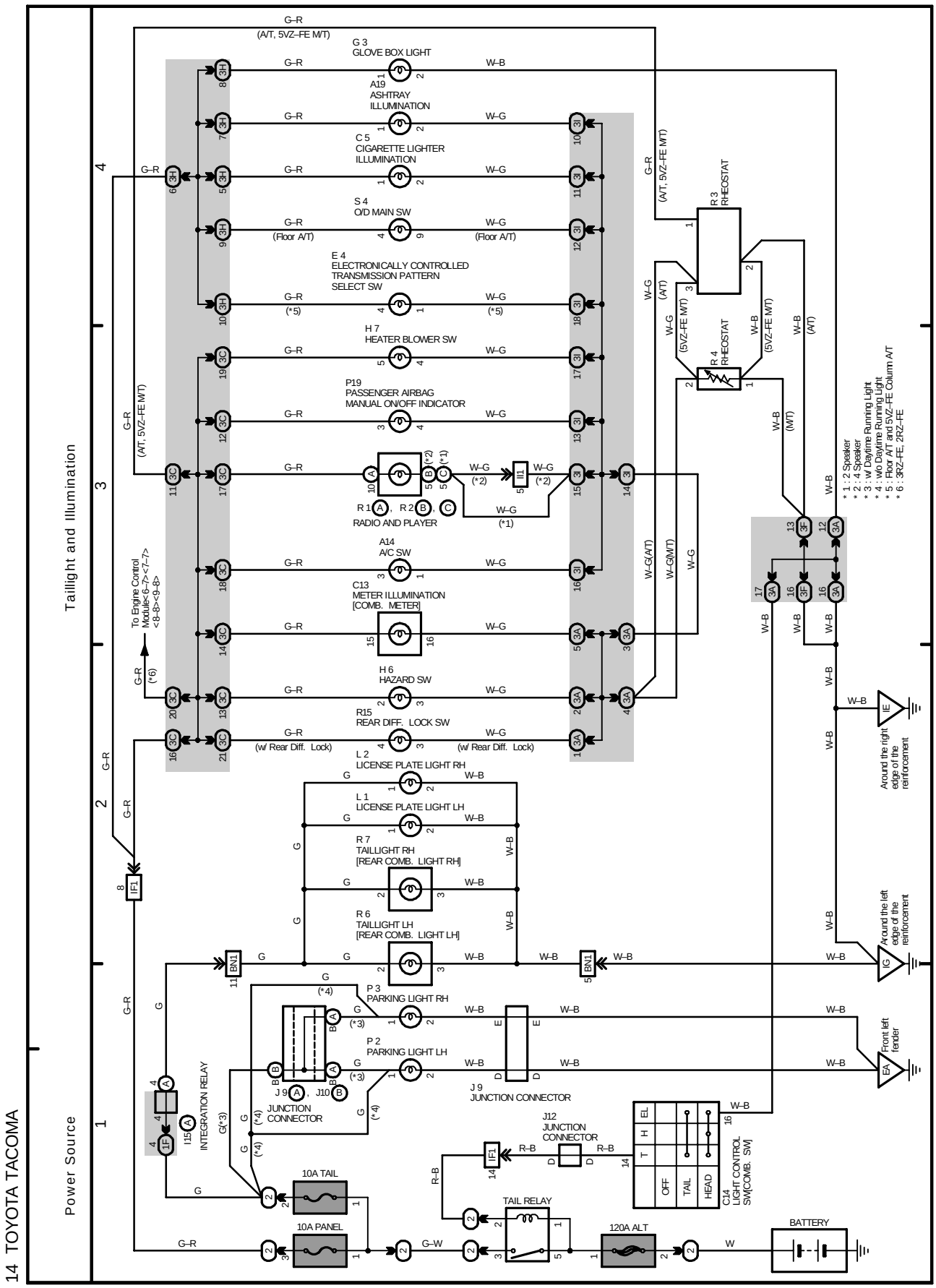
Taillight and Illumination
Power Source
G 3
GLOVE BOX LIGHT
A19
ASHTRAY
ILLUMINATION
C 5
CIGARETTE LIGHTER
ILLUMINATION
S 4
O/D MAIN SW
E 4
ELECTRONICALLY CONTROLLED
TRANSMISSION PATTERN
SELECT SW
H 7
HEATER BLOWER SW
P19
PASSENGER AIRBAG
MANUAL ON/OFF INDICATOR
R 1, R 2
RADIO AND PLAYER
A14
A/C SW
C13
METER ILLUMINATION
[COMB. METER]
H 6
HAZARD SW
R15
REAR DIFF. LOCK SW
L 2
LICENSE PLATE LIGHT RH
L 1
LICENSE PLATE LIGHT LH
R 7
TAILLIGHT RH
[REAR COMB. LIGHT RH]
R 6
TAILLIGHT LH
[REAR COMB. LIGHT LH]
P 3
PARKING LIGHT RH
P 2
PARKING LIGHT LH
J 9, J10
JUNCTION
CONNECTOR
J 9
JUNCTION CONNECTOR
J12
JUNCTION
CONNECTOR
I15
INTEGRATION RELAY
R 3
RHEOSTAT
R 4
RHEOSTAT
C14
LIGHT CONTROL
SW(COMB. SW)
OFF
TAIL
HEAD
EL
H
T
10A TAIL
10A PANEL
TAIL RELAY
120A ALT
BATTERY
To Engine Control
Module<6-7><7-7>
<8-8><9-8>
Around the right
edge of the
reinforcement
Around the left
edge of the
reinforcement
Front left
fender
* 1 : 2 Speaker
* 2 : 4 Speaker
* 3 : w/ Daytime Running Light
* 4 : w/o Daytime Running Light
* 5 : Floor A/T and 5VZ–FE Column A/T
* 6 : 3RZ–FE, 2RZ–FE

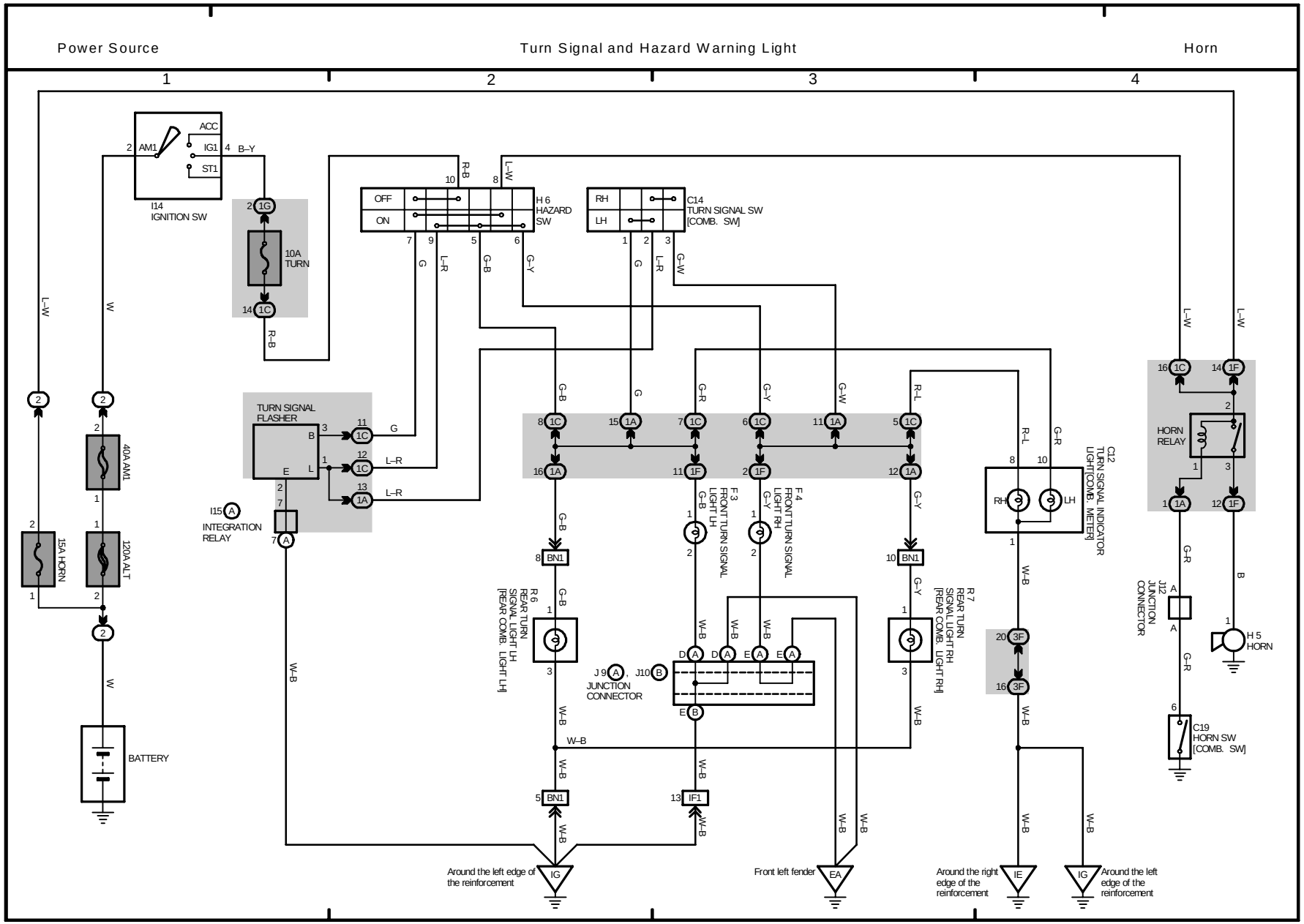
Power Source
Turn Signal and Hazard Warning Light
Horn
1
2
3
4
I14
IGNITION SW
ACC
IG1
ST1
AM1
B–Y
10A
TURN
H 6
HAZARD
SW
OFF
ON
C14
TURN SIGNAL SW
[COMB. SW]
RH
LH
TURN SIGNAL
FLASHER
I15
INTEGRATION
RELAY
40A AM1
15A HORN
120A ALT
BATTERY
F 3
FRONT TURN SIGNAL
LIGHT LH
F 4
FRONT TURN SIGNAL
LIGHT RH
R 6
REAR TURN
SIGNAL LIGHT LH
[REAR COMB. LIGHT LH]
R 7
REAR TURN
SIGNAL LIGHT RH
[REAR COMB. LIGHT RH]
J 9
J10
JUNCTION
CONNECTOR
C12
TURN SIGNAL INDICATOR
LIGHT[COMB. METER]
HORN
RELAY
J12
JUNCTION
CONNECTOR
H 5
HORN
C19
HORN SW
[COMB. SW]
Around the left edge of
the reinforcement
Front left fender
Around the right
edge of the
reinforcement
Around the left
edge of the
reinforcement

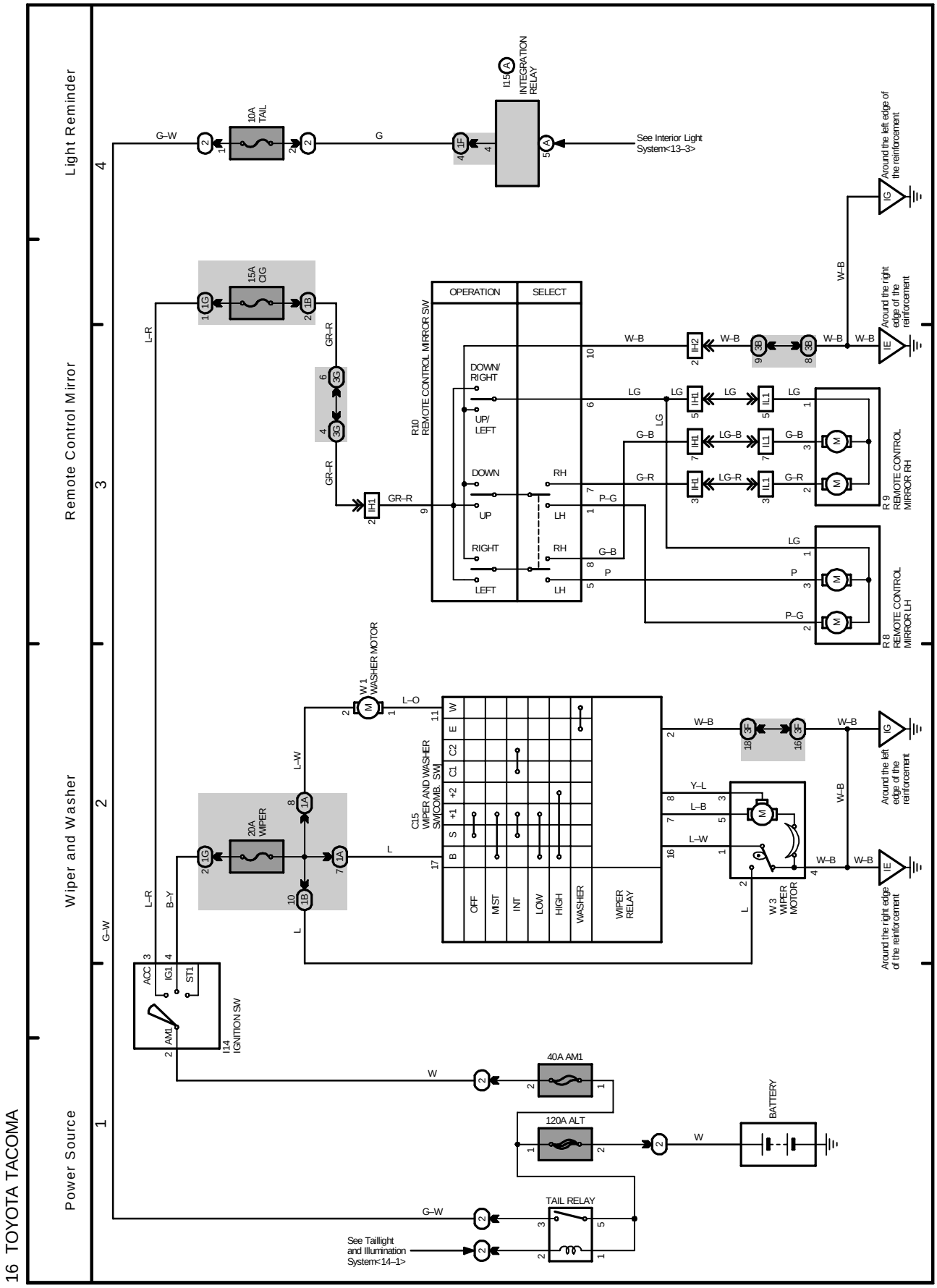
Light Reminder
Remote Control Mirror
Wiper and Washer
Power Source
10A TAIL
I15 INTEGRATION RELAY
See Interior Light System<13–3>
15A CIG
20A WIPER
R10 REMOTE CONTROL MIRROR SW
OPERATION
SELECT
DOWN/ RIGHT
UP/ LEFT
DOWN
UP
RIGHT
LEFT
RH
LH
R 9 REMOTE CONTROL MIRROR RH
R 8 REMOTE CONTROL MIRROR LH
W 1 WASHER MOTOR
C15 WIPER AND WASHER SW(COMB. SW)
OFF
MST
INT
LOW
HIGH
WASHER
WIPER RELAY
W 3 WIPER MOTOR
Around the left edge of the reinforcement
Around the right edge of the reinforcement
I14 IGNITION SW
ACC
IG1
ST1
AM1
40A AM1
120A ALT
BATTERY
TAIL RELAY
See Taillight and Illumination System<14–1>

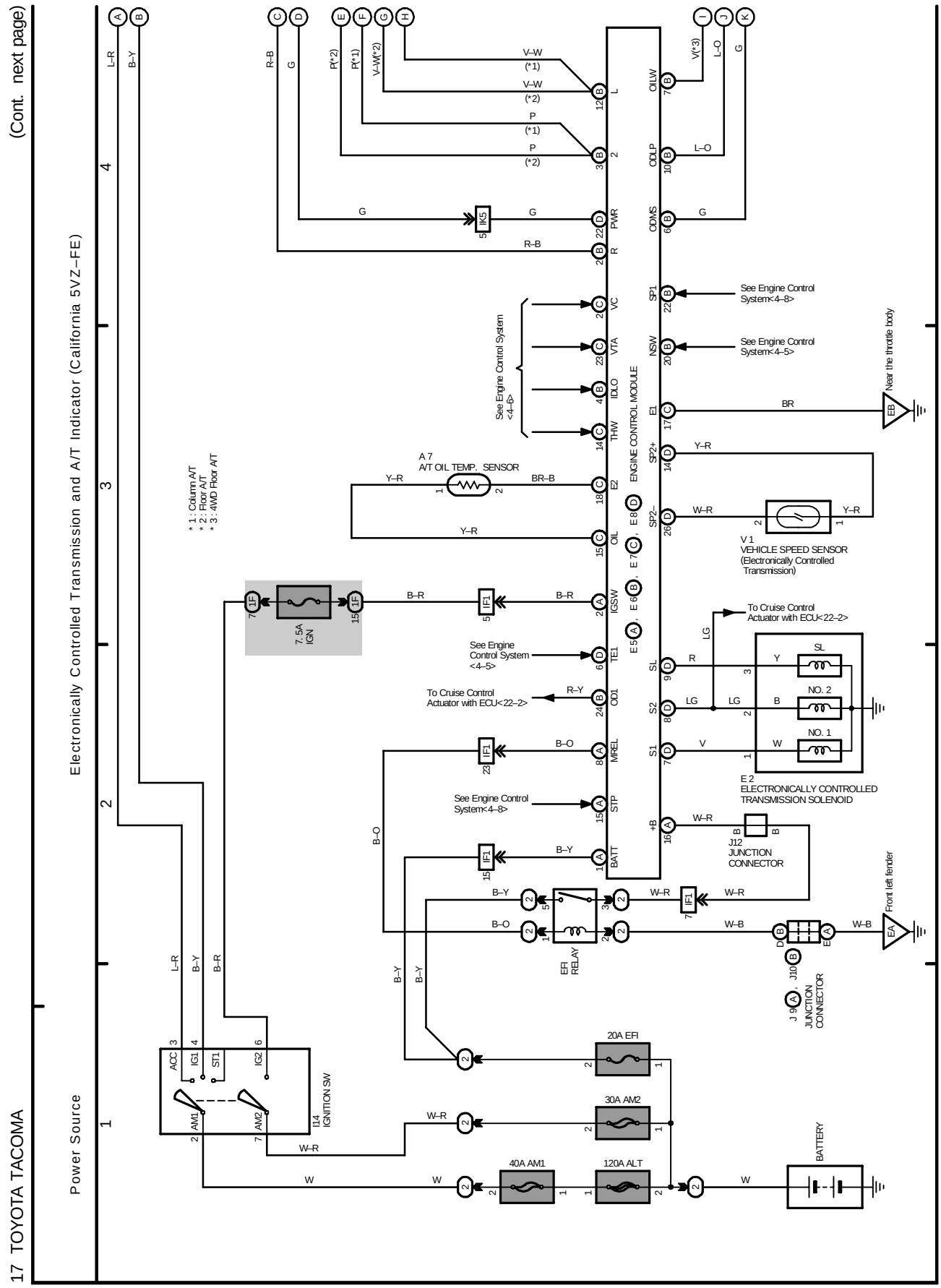
(Cont. next page)
Electronically Controlled Transmission and A/T Indicator (California 5VZ–FE)
Power Source
ENGINE CONTROL MODULE
See Engine Control System <4–6>
See Engine Control System<4–8>
See Engine Control System<4–5>
Near the throttle body
A 7
A/T OIL TEMP. SENSOR
V 1
VEHICLE SPEED SENSOR
(Electronically Controlled Transmission)
To Cruise Control Actuator with ECU<22–2>
E 2
ELECTRONICALLY CONTROLLED TRANSMISSION SOLENOID
J12
JUNCTION CONNECTOR
J 9, J10
JUNCTION CONNECTOR
Front left fender
EFI RELAY
7. 5A IGN
20A EFI
30A AM2
40A AM1
120A ALT
BATTERY
I14
IGNITION SW
* 1 : Column A/T
* 2 : Floor A/T
* 3 : 4WD Floor A/T

Electronically Controlled Transmission and A/T Indicator (California 5VZ–FE)

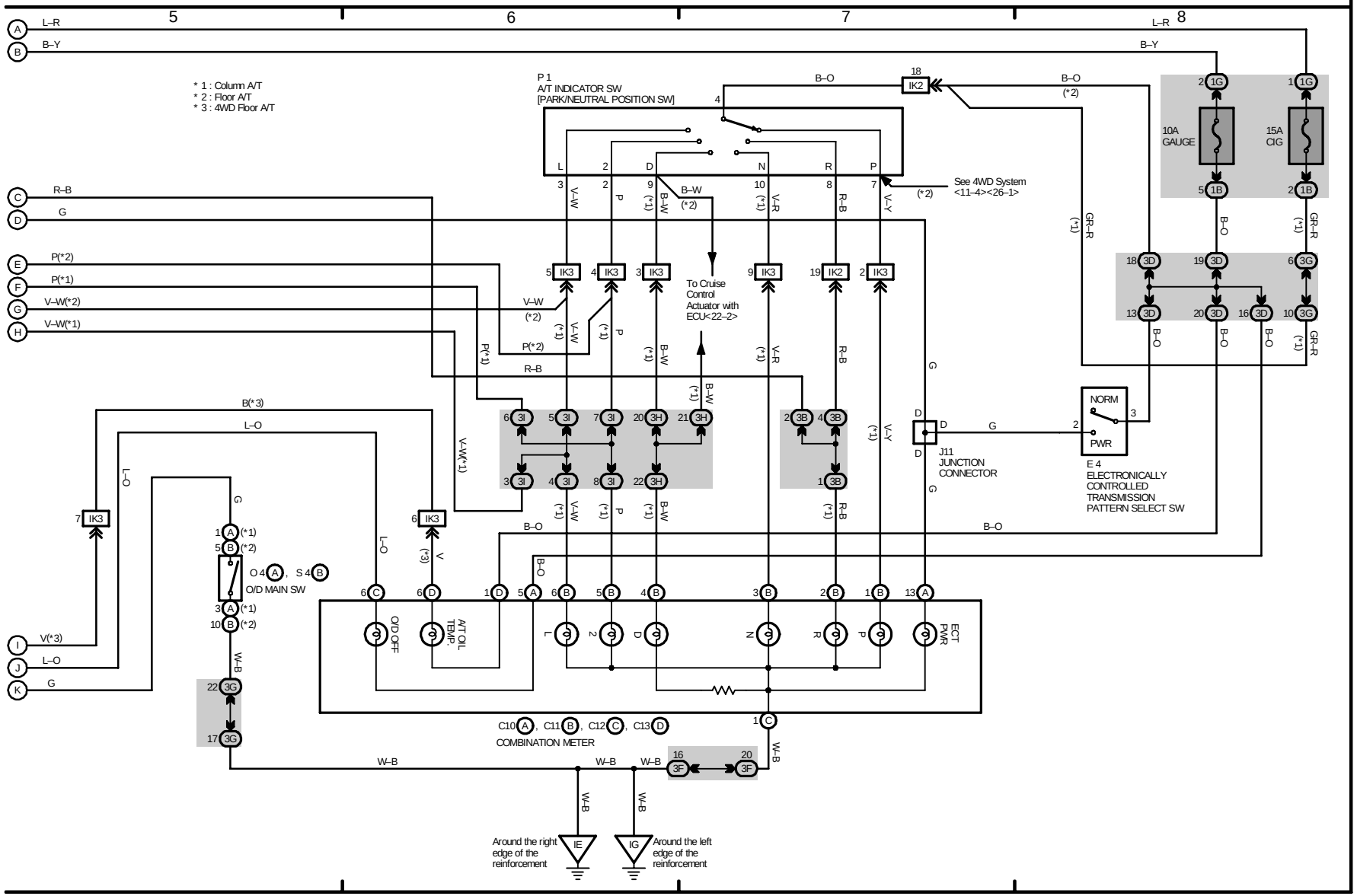

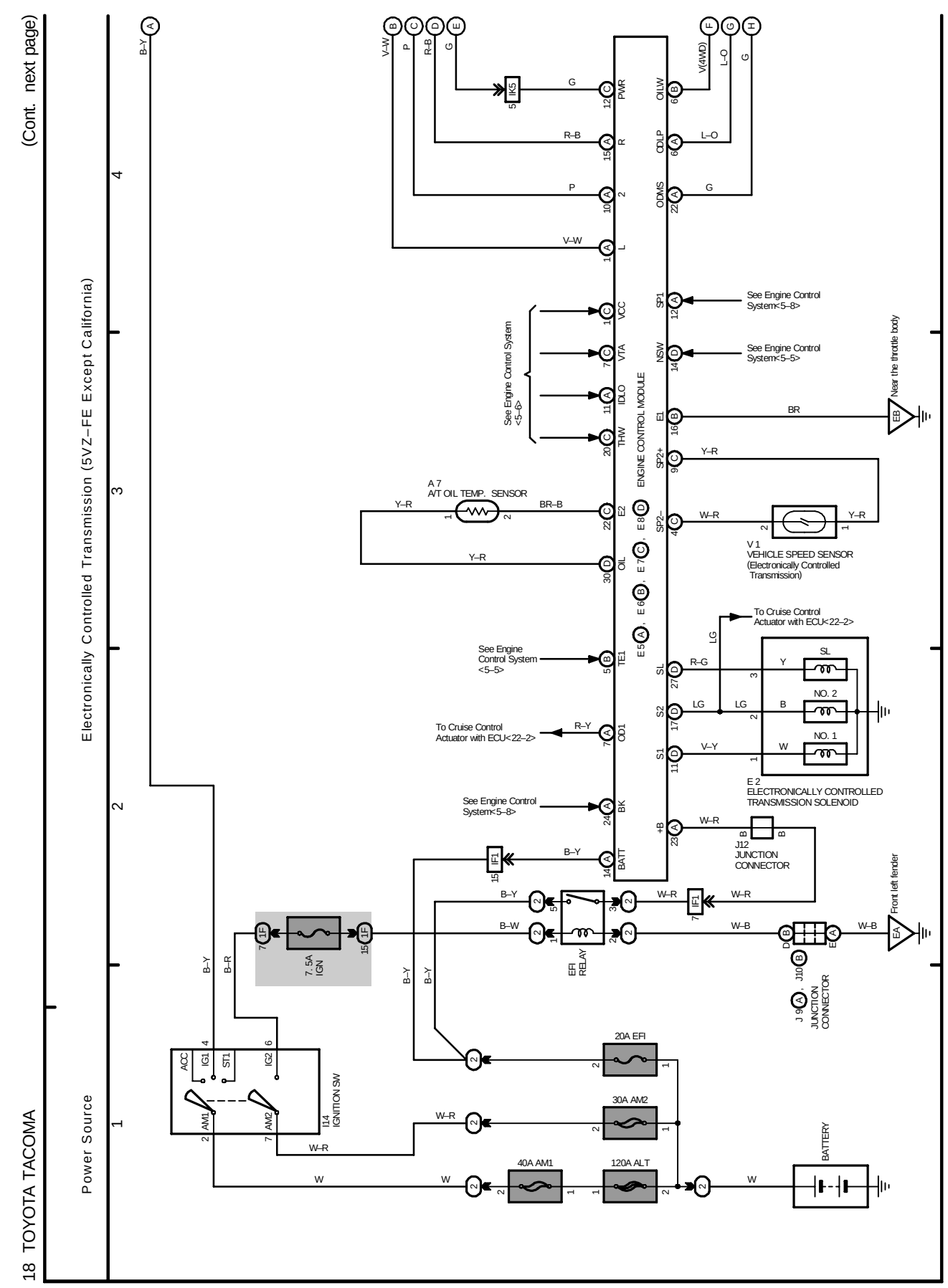
(Cont. next page)
Electronically Controlled Transmission (5VZ–FE Except California)
Power Source
ENGINE CONTROL MODULE
See Engine Control System <5–6>
See Engine Control System <5–5>
See Engine Control System<5–8>
See Engine Control System<5–8>
A 7
A/T OIL TEMP. SENSOR
V 1
VEHICLE SPEED SENSOR
(Electronically Controlled Transmission)
To Cruise Control Actuator with ECU<22–2>
To Cruise Control Actuator with ECU<22–2>
E 2
ELECTRONICALLY CONTROLLED TRANSMISSION SOLENOID
J12
JUNCTION CONNECTOR
J 9, J10
JUNCTION CONNECTOR
Near the throttle body
Front left fender
7.5A IGN
EFI RELAY
20A EFI
30A AM2
40A AM1
120A ALT
BATTERY
I14
IGNITION SW
ACC
IG1
ST1
IG2
AM1
AM2
PWR
R
L
VCC
VTA
IDLO
THW
E2
OIL
TE1
OD1
BK
BATT
OILW
ODLP
ODMS
SP1
NSW
E1
SP2+
SP2–
SL
S2
S1
+B
V(4WD)
L–O
G
V–W
P
R–B
B–Y
B–R
B–W
W–R
W–B
W
BR
BR–B
Y–R
R–G
LG
Y
B
W
NO. 2
NO. 1
IK5
IF1
IF
EA
EB
18 TOYOTA TACOMA

Electronically Controlled Transmission (5VZ–FE Except California)

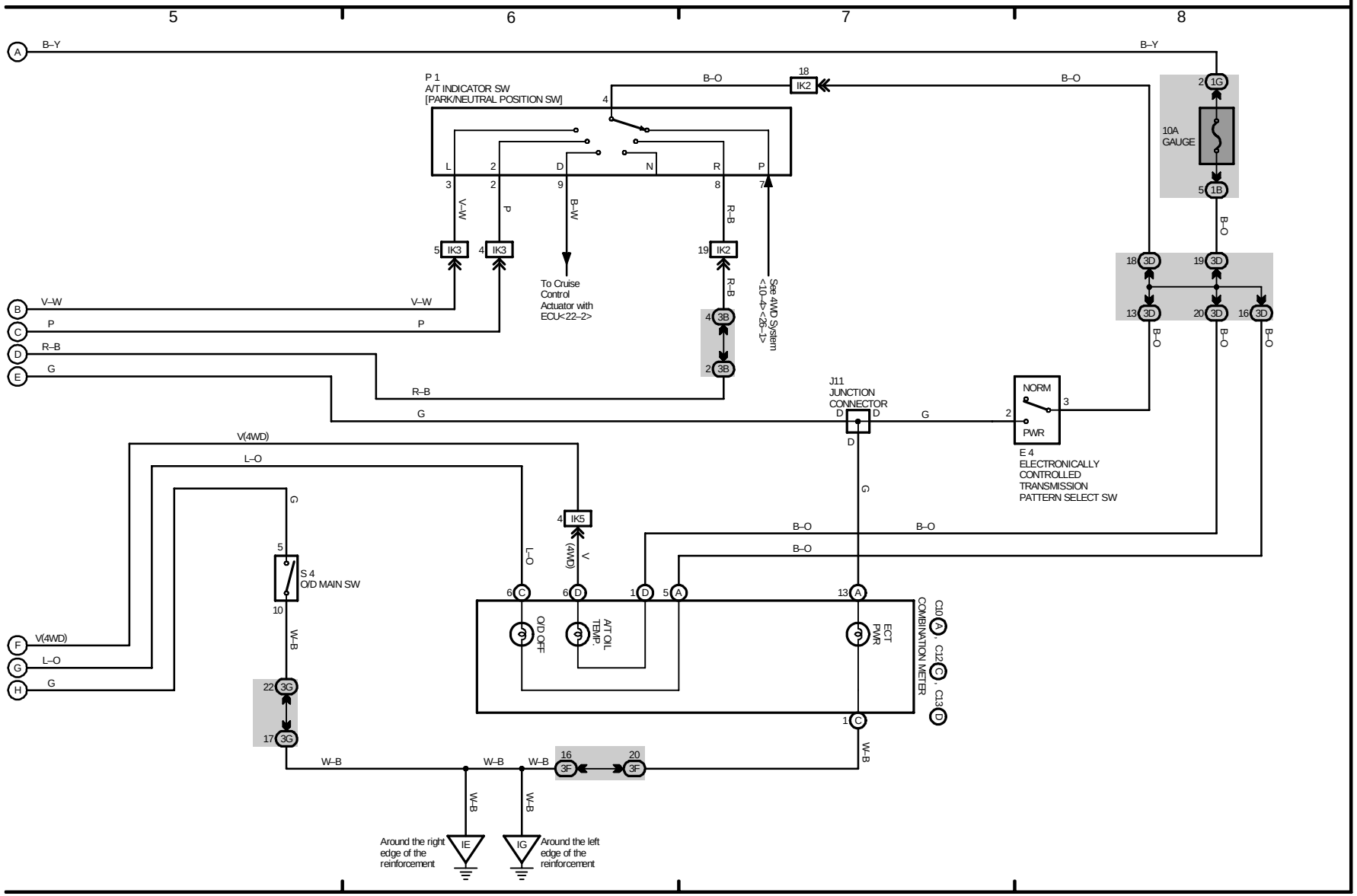

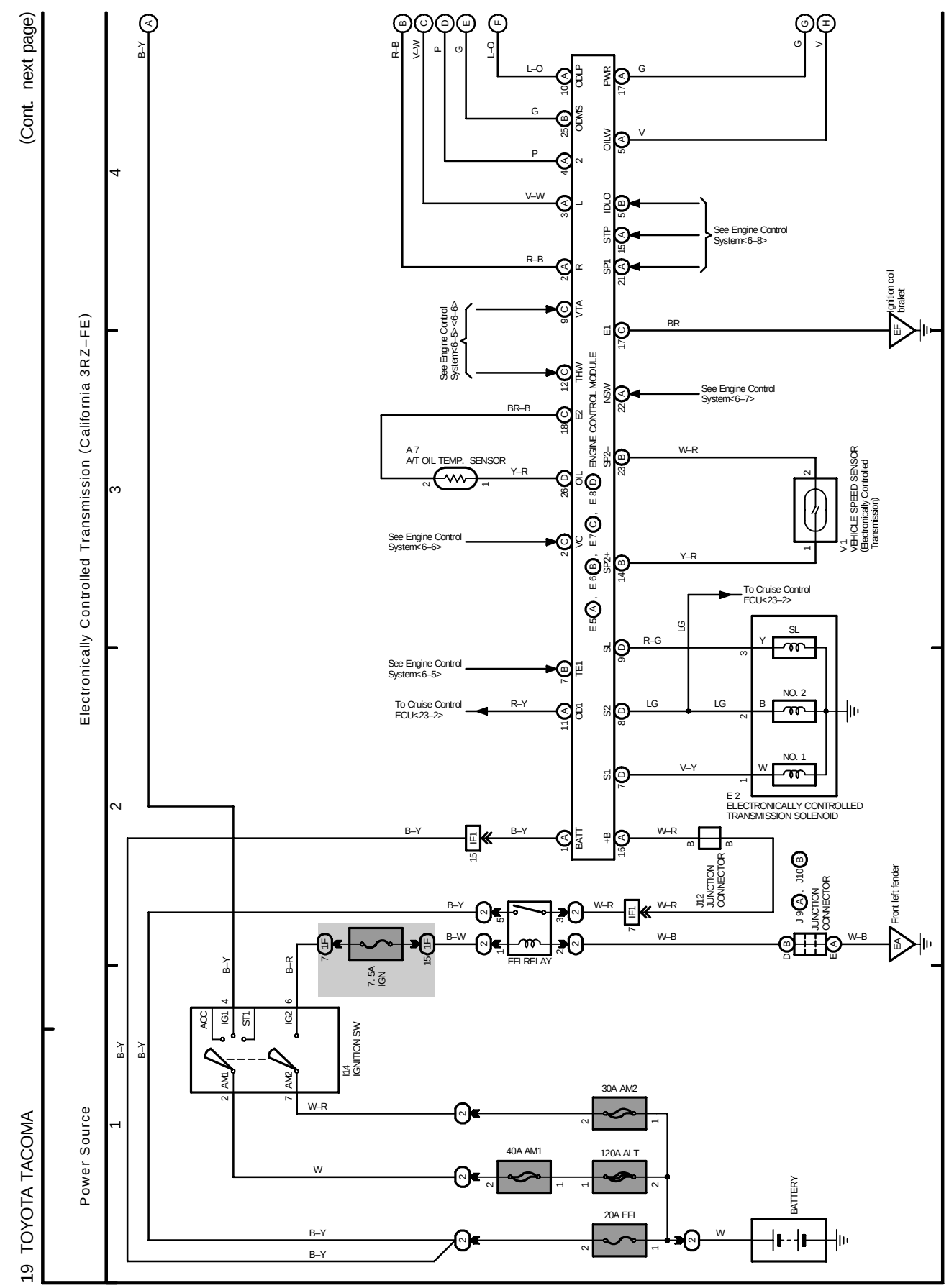
(Cont. next page)
Electronically Controlled Transmission (California 3RZ–FE)
Power Source
ENGINE CONTROL MODULE
A 7
A/T OIL TEMP. SENSOR
See Engine Control System<6–5><6–6>
See Engine Control System<6–6>
See Engine Control System<6–5>
See Engine Control System<6–8>
See Engine Control System<6–7>
To Cruise Control ECU<23–2>
Ignition coil braket
V 1
VEHICLE SPEED SENSOR (Electronically Controlled Transmission)
E 2
ELECTRONICALLY CONTROLLED TRANSMISSION SOLENOID
SL
NO. 2
NO. 1
J12 JUNCTION CONNECTOR
J 9, J10 JUNCTION CONNECTOR
Front left fender
EFI RELAY
7.5A IGN
I14 IGNITION SW
30A AM2
40A AM1
120A ALT
20A EFI
BATTERY

Electronically Controlled Transmission (California 3RZ–FE)

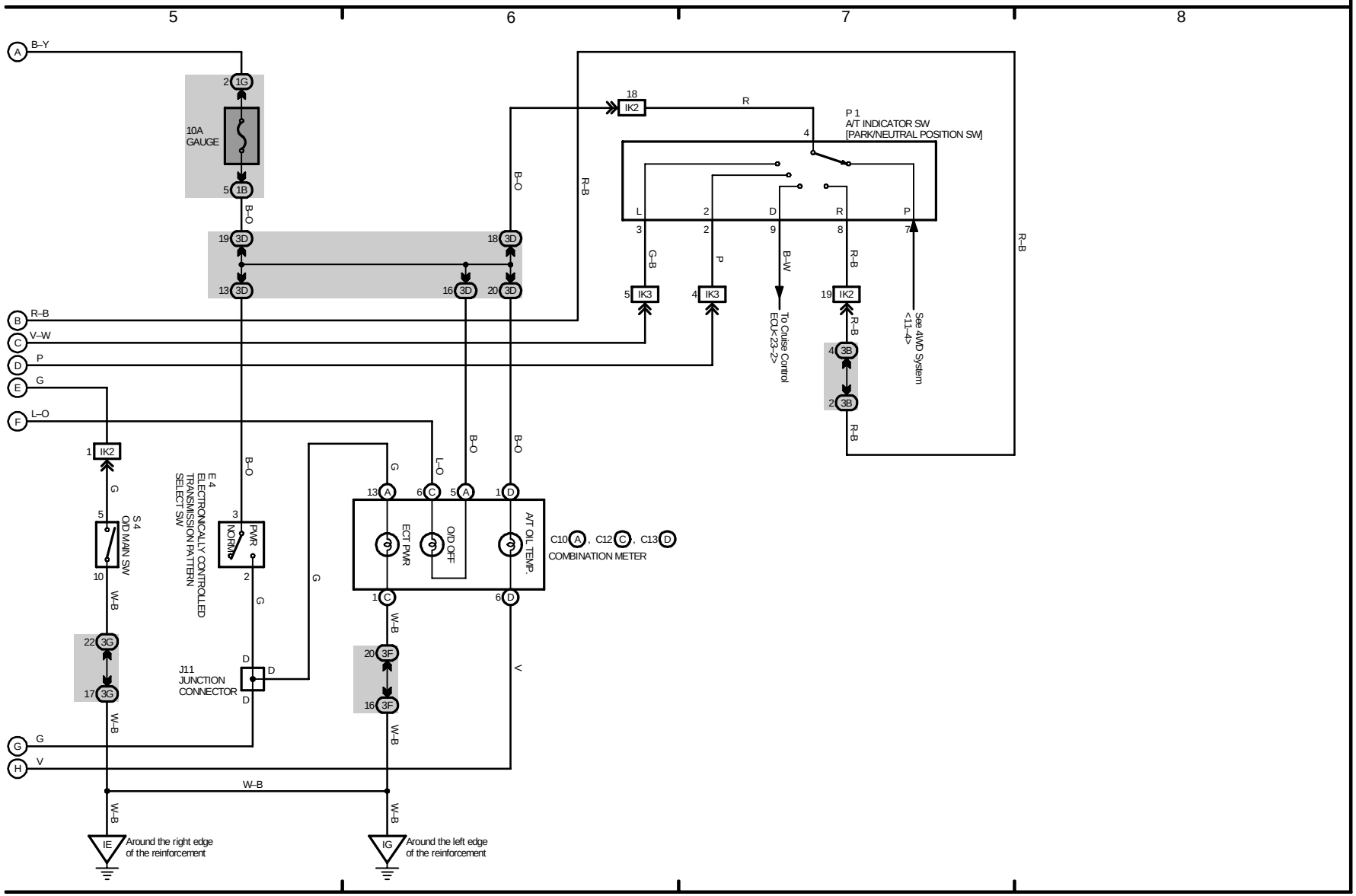

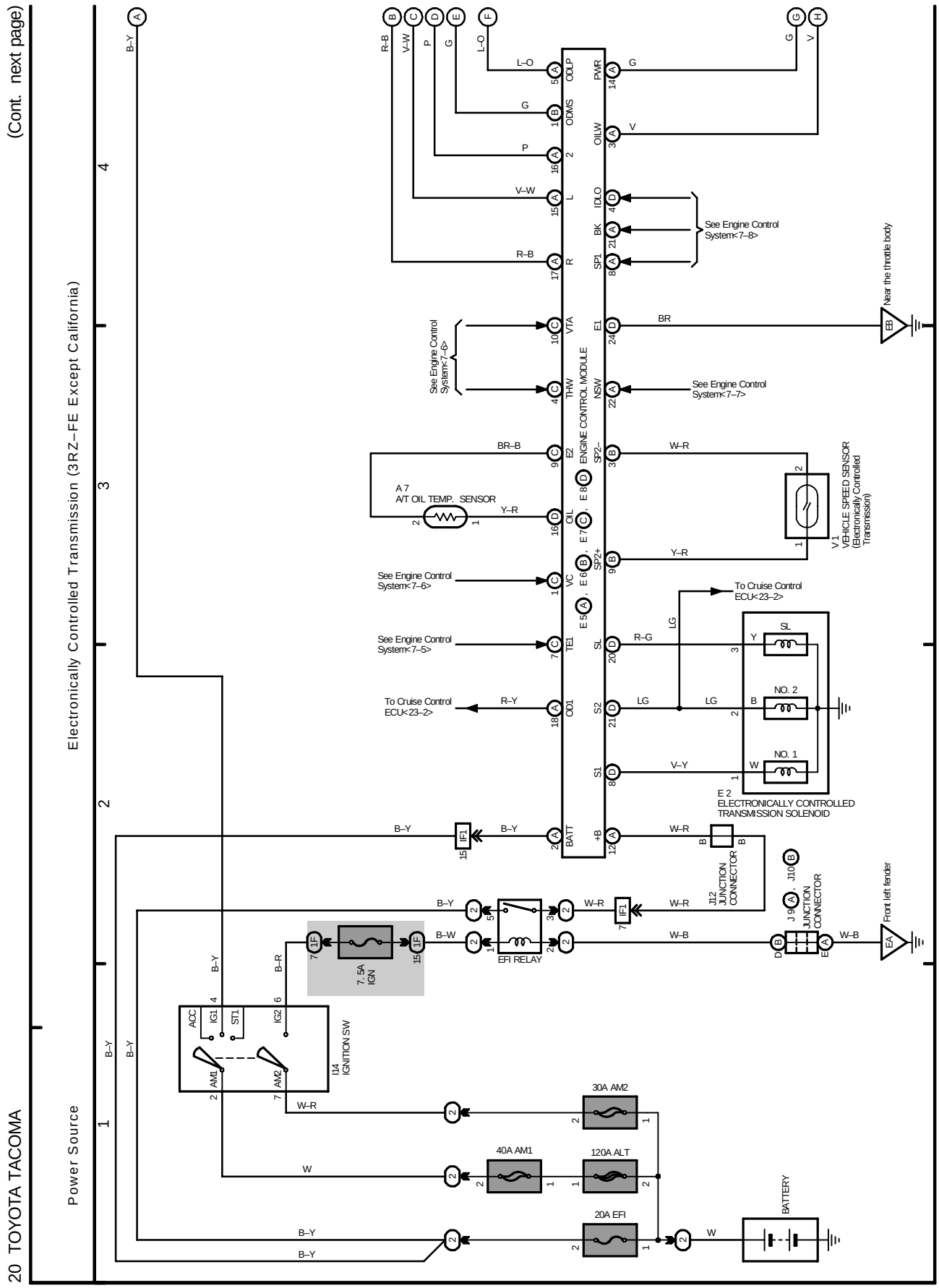
(Cont. next page)
Electronically Controlled Transmission (3RZ–FE Except California)
Power Source
ENGINE CONTROL MODULE
ODLP
OIDMS
OILW
IDLO
BK
SP1
E1
NSW
SP2–
SP2+
+B
BATT
ODL
OIL
VC
TE1
S1
S2
THW
VTA
E2
PWR
See Engine Control System<7–8>
See Engine Control System<7–6>
See Engine Control System<7–7>
See Engine Control System<7–5>
See Engine Control System<7–6>
To Cruise Control ECU<23–2>
A 7
A/T OIL TEMP. SENSOR
V 1
VEHICLE SPEED SENSOR
(Electronically Controlled Transmission)
E 2
ELECTRONICALLY CONTROLLED TRANSMISSION SOLENOID
SL
NO. 2
NO. 1
J12 JUNCTION CONNECTOR
J 9 , J10
JUNCTION CONNECTOR
Near the throttle body
Front left fender
EFI RELAY
7.5A IGN
I14 IGNITION SW
ACC
IG1
ST1
IG2
AM1
AM2
30A AM2
40A AM1
120A ALT
20A EFI
BATTERY

Electronically Controlled Transmission (3RZ–FE Except California)

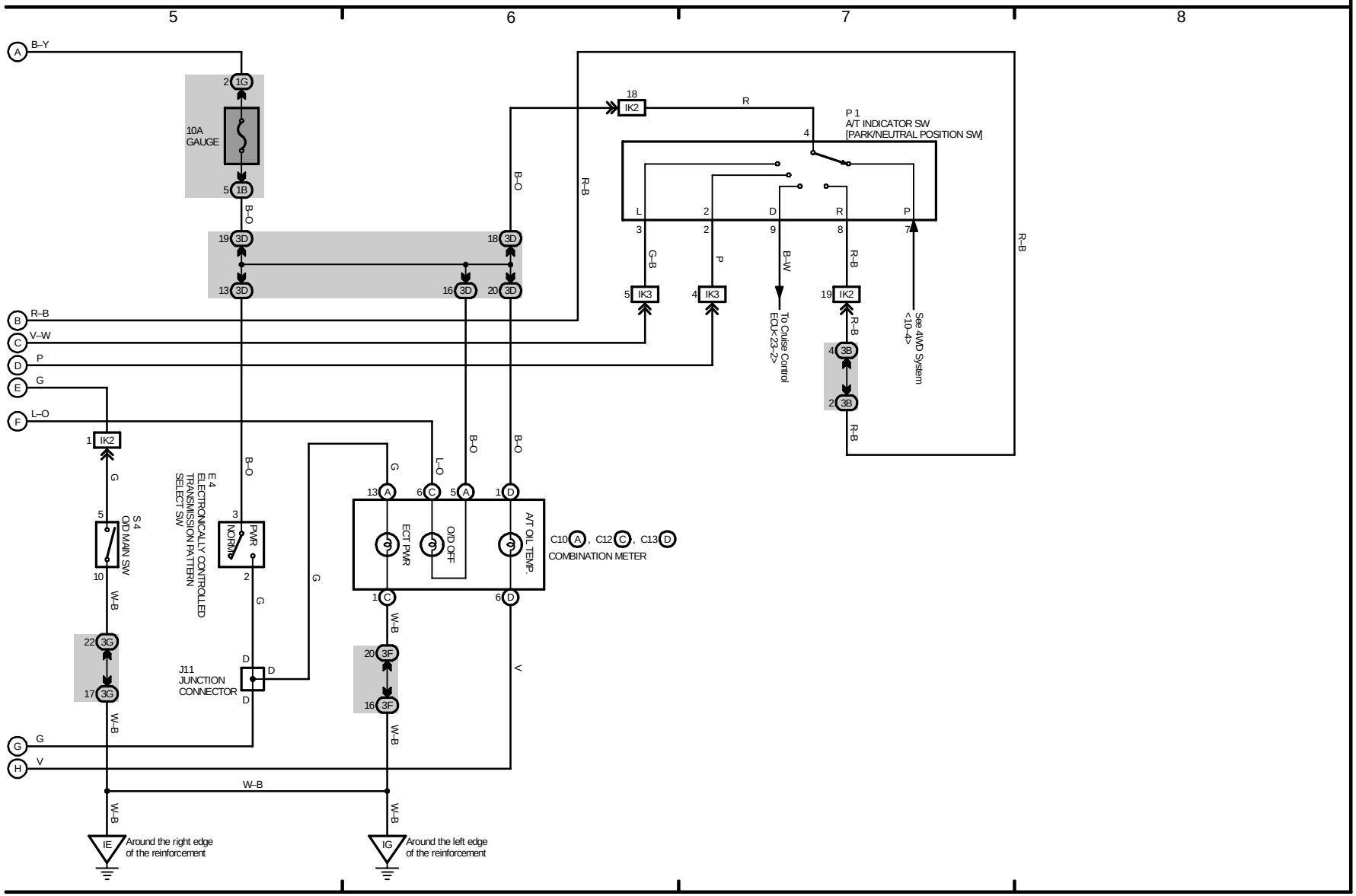

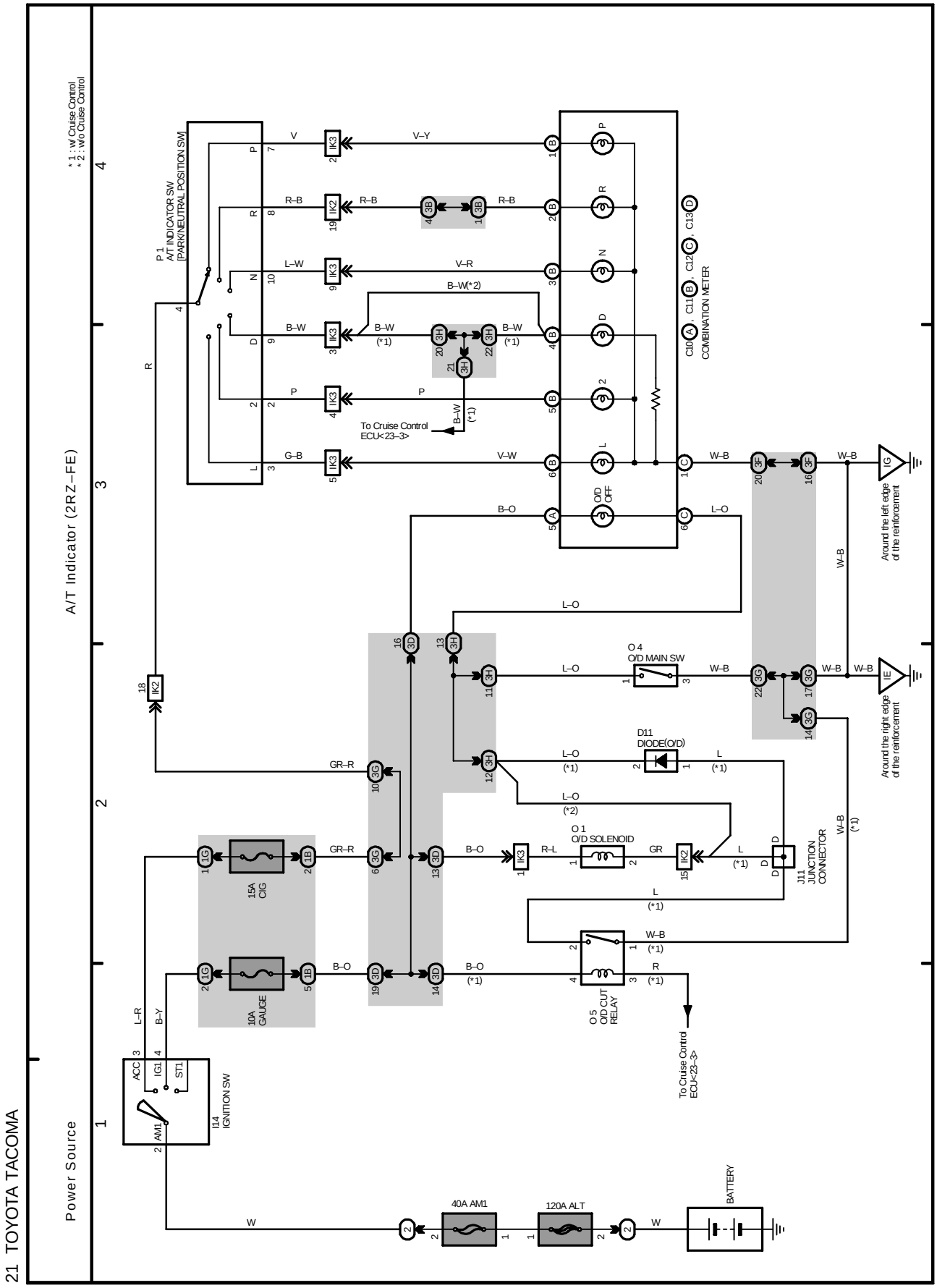
A/T Indicator (2RZ–FE)
Power Source
* 1 : w/ Cruise Control
* 2 : w/o Cruise Control
P 1
A/T INDICATOR SW
(PARK/NEUTRAL POSITION SW)
COMBINATION METER
To Cruise Control ECU<23–3>
O 4
O/D MAIN SW
D11
DIODE(O/D)
O 1
O/D SOLENOID
O 5
O/D CUT RELAY
J11
JUNCTION CONNECTOR
15A CIG
10A GAUGE
I14
IGNITION SW
40A AM1
120A ALT
BATTERY
Around the left edge of the reinforcement
Around the right edge of the reinforcement

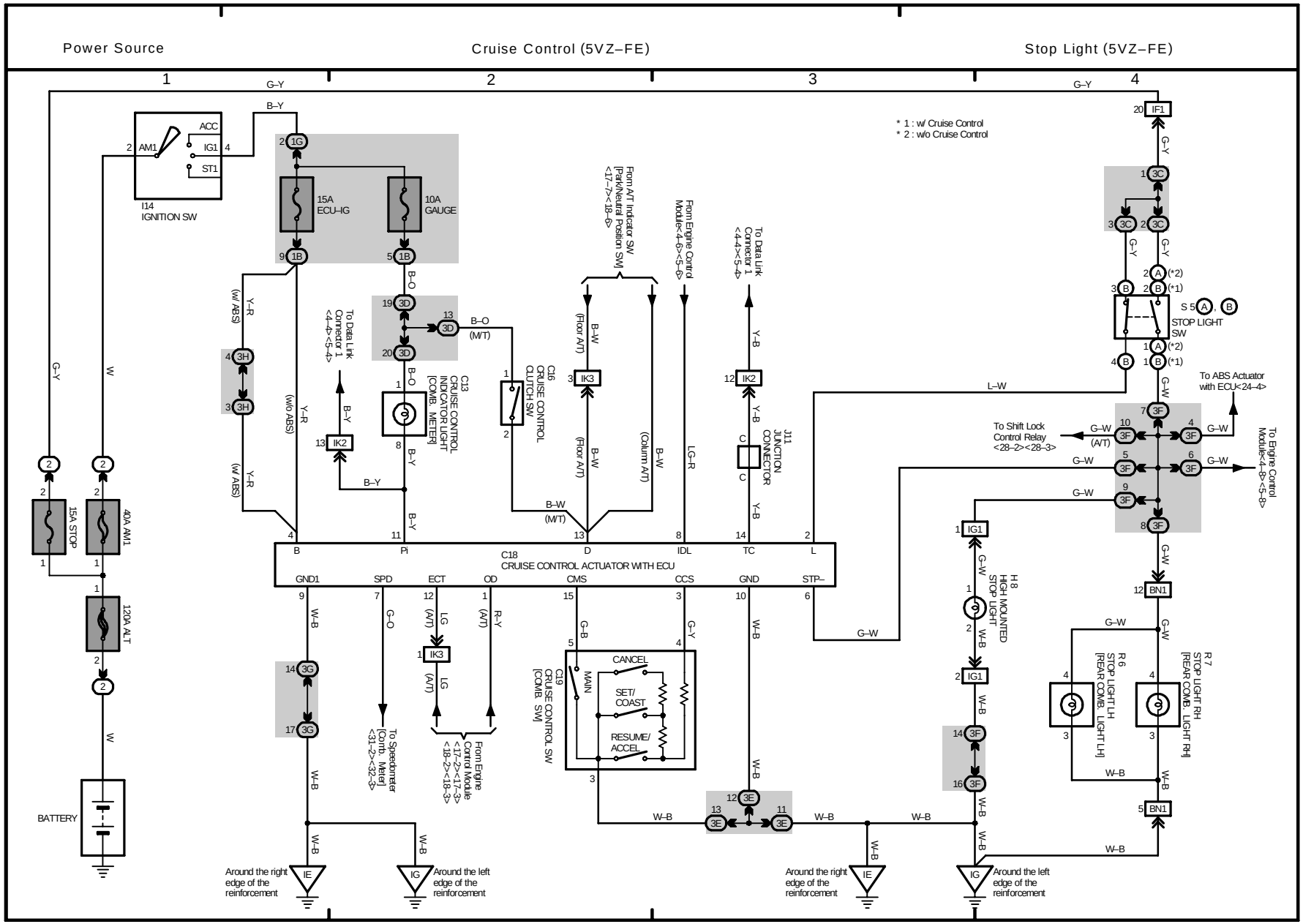
Power Source
Cruise Control (5VZ–FE)
Stop Light (5VZ–FE)
* 1 : w/ Cruise Control
* 2 : w/o Cruise Control
I14
IGNITION SW
ACC
IG1
ST1
AM1
15A
ECU–IG
10A
GAUGE
15A STOP
40A AM1
120A ALT
BATTERY
C13
CRUISE CONTROL
INDICATOR LIGHT
[COMB. METER]
C16
CRUISE CONTROL
CLUTCH SW
From A/T Indicator SW
[Park/Neutral Position SW]
<17–7><18–6>
From Engine Control
Module<4–6><5–6>
To Data Link
Connector 1
<4–4><5–4>
J11
JUNCTION
CONNECTOR
C18
CRUISE CONTROL ACTUATOR WITH ECU
B
Pi
D
IDL
TC
L
GND1
SPD
ECT
OD
CMS
CCS
GND
STP–
C19
CRUISE CONTROL SW
[COMB. SW]
MAIN
CANCEL
SET/
COAST
RESUME/
ACCEL
To Speedometer
[Comb. Meter]
<31–2><32–3>
From Engine
Control Module
<17–2><17–3>
<18–2><18–3>
Around the right
edge of the
reinforcement
Around the left
edge of the
reinforcement
S 5
STOP LIGHT
SW
To ABS Actuator
with ECU<24–4>
To Shift Lock
Control Relay
<28–2><28–3>
To Engine Control
Module<4–8><5–8>
H 8
HIGH MOUNTED
STOP LIGHT
R 6
STOP LIGHT LH
[REAR COMB. LIGHT LH]
R 7
STOP LIGHT RH
[REAR COMB. LIGHT RH]

M

M OVERALL ELECTRICAL WIRING DIAGRAM

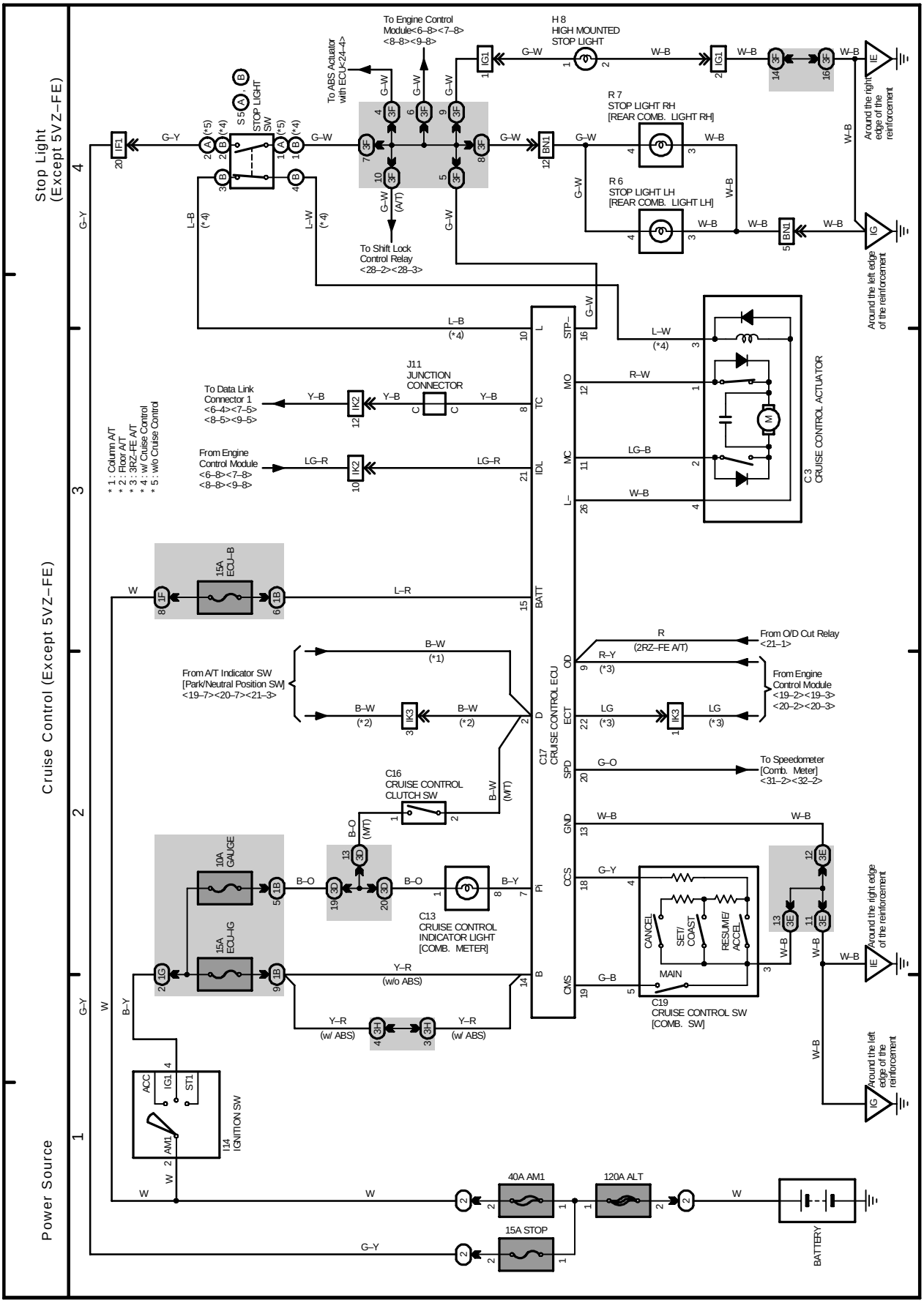

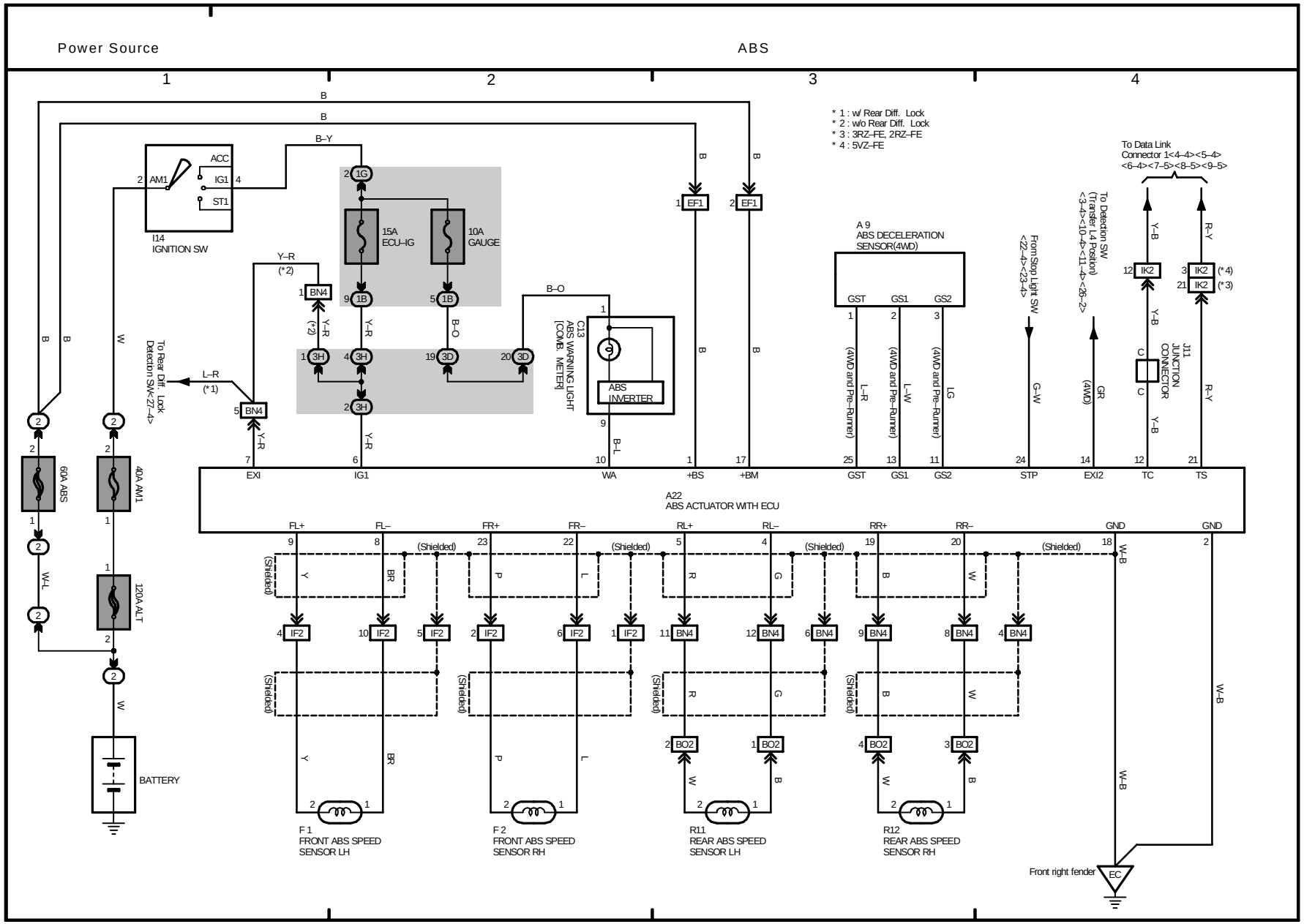
Power Source
ABS
1
2
3
4
* 1 : w/ Rear Diff. Lock
* 2 : w/o Rear Diff. Lock
* 3 : 3RZ–FE, 2RZ–FE
* 4 : 5VZ–FE
I14
IGNITION SW
ACC
IG1
ST1
AM1
15A
ECU–IG
10A
GAUGE
C13
ABS WARNING LIGHT
[COMB. METER]
ABS
INVERTER
To Rear Diff. Lock
Detection SW<27–4>
60A ABS
40A AM1
120A ALT
BATTERY
A 9
ABS DECELERATION
SENSOR(4WD)
GST
GS1
GS2
(4WD and Pre–Runner)
From Stop Light SW
<22–4><23–4>
To Detection SW
(Transfer L4 Position)
<3–4><10–4><11–4><26–2>
(4WD)
To Data Link
Connector 1<4–4><5–4>
<6–4><7–5><8–5><9–5>
J11
JUNCTION
CONNECTOR
EXI
IG1
WA
+BS
+BM
STP
EXI2
TC
TS
A22
ABS ACTUATOR WITH ECU
FL+
FL–
FR+
FR–
RL+
RL–
RR+
RR–
GND
(Shielded)
F 1
FRONT ABS SPEED
SENSOR LH
F 2
FRONT ABS SPEED
SENSOR RH
R11
REAR ABS SPEED
SENSOR LH
R12
REAR ABS SPEED
SENSOR RH
Front right fender
EC

M

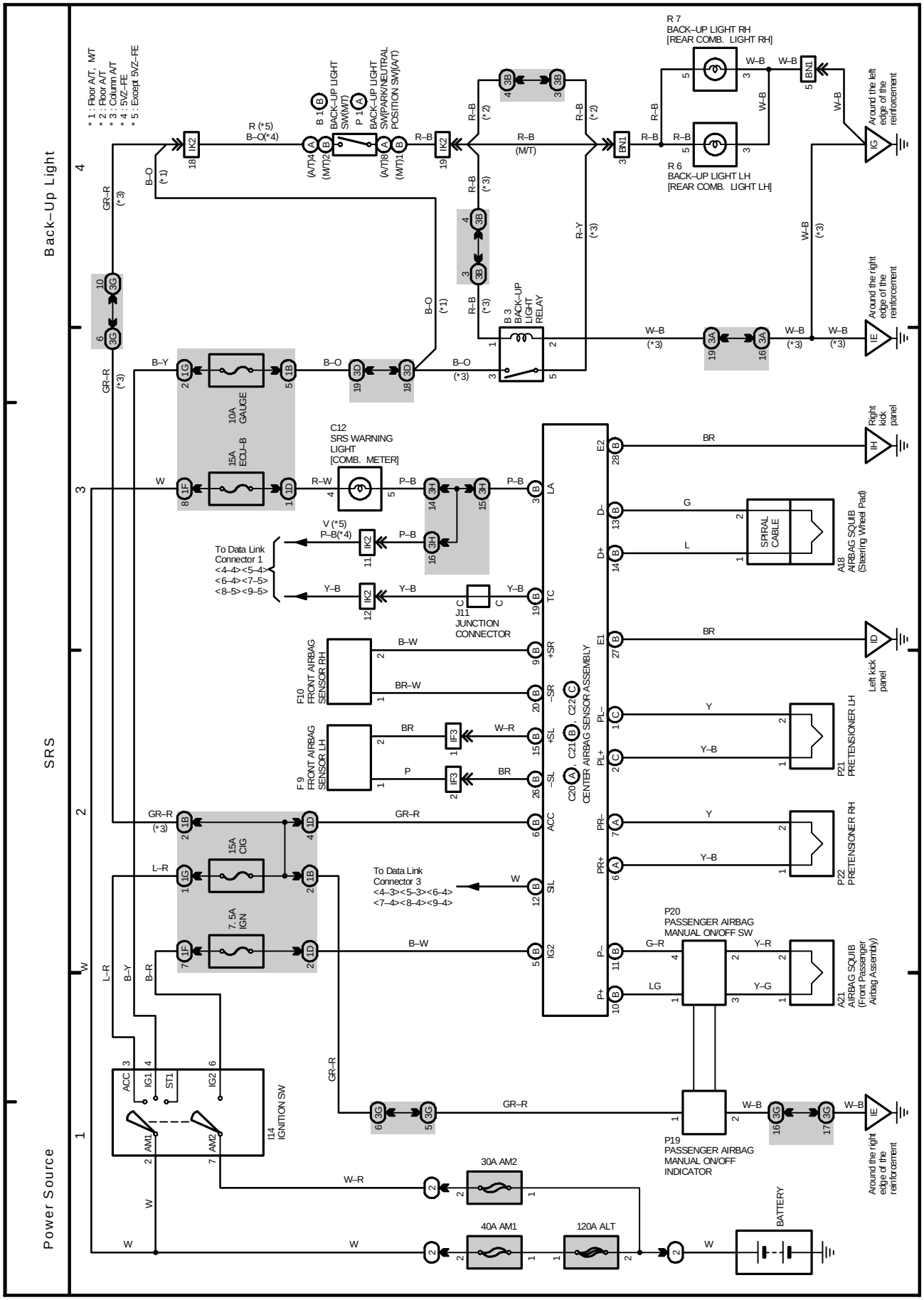
Back–Up Light
SRS
Power Source
* 1 : Floor A/T, M/T
* 2 : Floor A/T
* 3 : Column A/T
* 4 : 5VZ–FE
* 5 : Except 5VZ–FE
R 7
BACK–UP LIGHT RH
[REAR COMB. LIGHT RH]
R 6
BACK–UP LIGHT LH
[REAR COMB. LIGHT LH]
BACK–UP LIGHT SW(M/T)
BACK–UP LIGHT SW(PARK/NEUTRAL POSITION SW)(A/T)
B 3
BACK–UP LIGHT RELAY
10A GAUGE
15A ECU–B
15A CIG
7.5A IGN
C12
SRS WARNING LIGHT
[COMB. METER]
To Data Link Connector 1
<4–4><5–4>
<6–4><7–5>
<8–5><9–5>
J11
JUNCTION CONNECTOR
F10
FRONT AIRBAG SENSOR RH
F9
FRONT AIRBAG SENSOR LH
CENTER AIRBAG SENSOR ASSEMBLY
To Data Link Connector 3
<4–3><5–3><6–4>
<7–4><8–4>
<9–4>
SPIRAL CABLE
A18
AIRBAG SQUIB
(Steering Wheel Pad)
P21
PRETENSIONER LH
P22
PRETENSIONER RH
P20
PASSENGER AIRBAG MANUAL ON/OFF SW
A21
AIRBAG SQUIB
(Front Passenger Airbag Assembly)
P19
PASSENGER AIRBAG MANUAL ON/OFF INDICATOR
I14
IGNITION SW
30A AM2
40A AM1
120A ALT
BATTERY
Around the left edge of the reinforcement
Around the right edge of the reinforcement
Right kick panel
Left kick panel

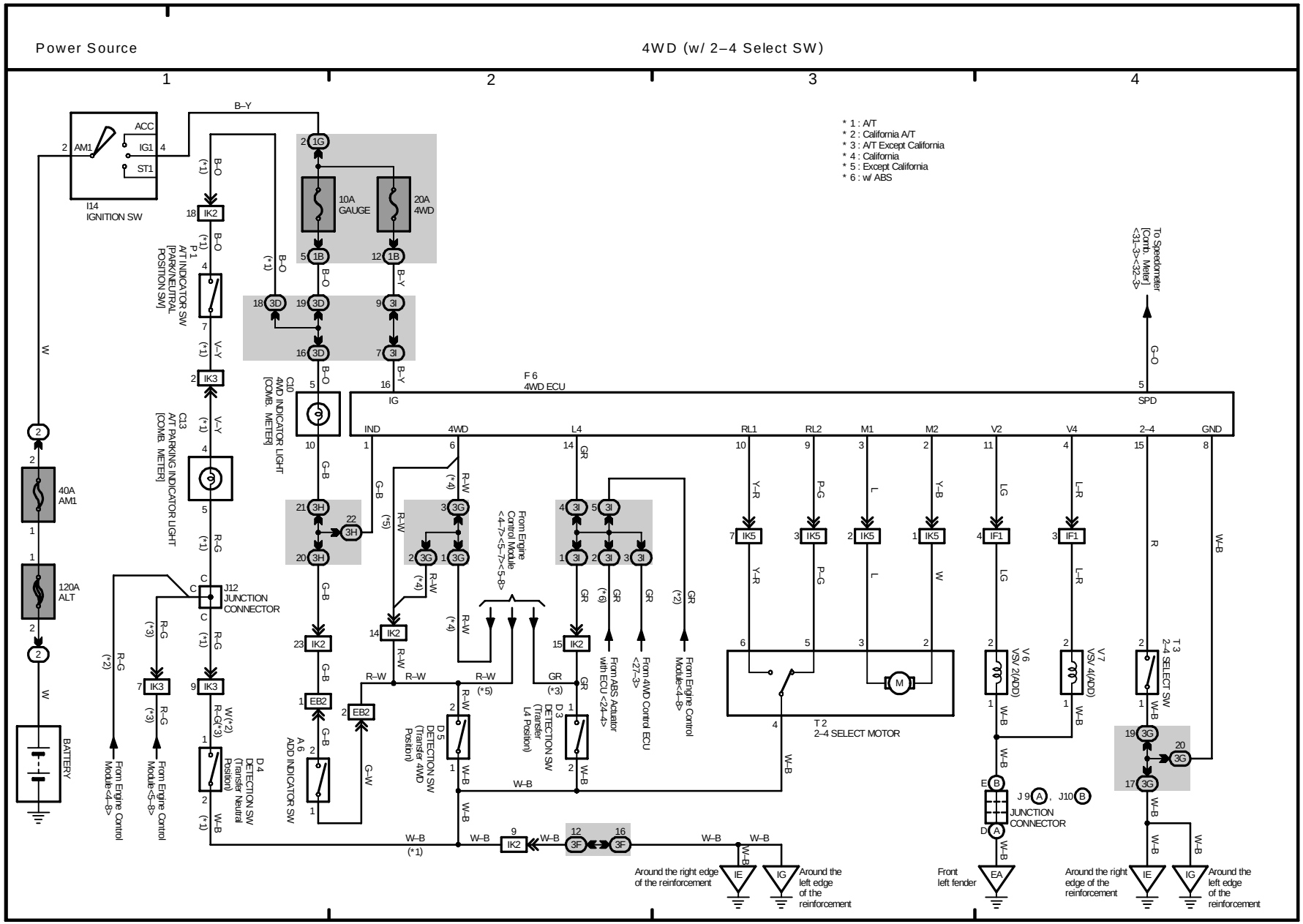
Power Source
4WD (w/ 2–4 Select SW)
1
2
3
4
* 1 : A/T
* 2 : California A/T
* 3 : A/T Except California
* 4 : California
* 5 : Except California
* 6 : w/ ABS
I14
IGNITION SW
ACC
IG1
ST1
AM1
10A
GAUGE
20A
4WD
40A
AM1
120A
ALT
BATTERY
P 1
A/T INDICATOR SW
[PARK/NEUTRAL
POSITION SW]
C13
A/T PARKING INDICATOR LIGHT
[COMB. METER]
C10
4WD INDICATOR LIGHT
[COMB. METER]
J12
JUNCTION
CONNECTOR
A 6
ADD INDICATOR SW
D 4
DETECTION SW
(Transfer Neutral
Position)
D 5
DETECTION SW
(Transfer 4WD
Position)
D 3
DETECTION SW
(Transfer
L4 Position)
F 6
4WD ECU
IND
4WD
L4
RL1
RL2
M1
M2
V2
V4
2–4
GND
IG
SPD
To Speedometer
[Comb. Meter]
<31–3><32–3>
From Engine
Control Module
<4–7><5–7><5–8>
From ABS Actuator
with ECU <24–4>
From 4WD Control ECU
<27–3>
From Engine Control
Module<4–8>
From Engine Control
Module<5–8>
T 2
2–4 SELECT MOTOR
V 6
VSV 2(ADD)
V 7
VSV 4(ADD)
T 3
2–4 SELECT SW
J 9
J10
JUNCTION
CONNECTOR
Around the right edge
of the reinforcement
Around the
left edge
of the
reinforcement
Front
left fender
EA
IE
IG

M

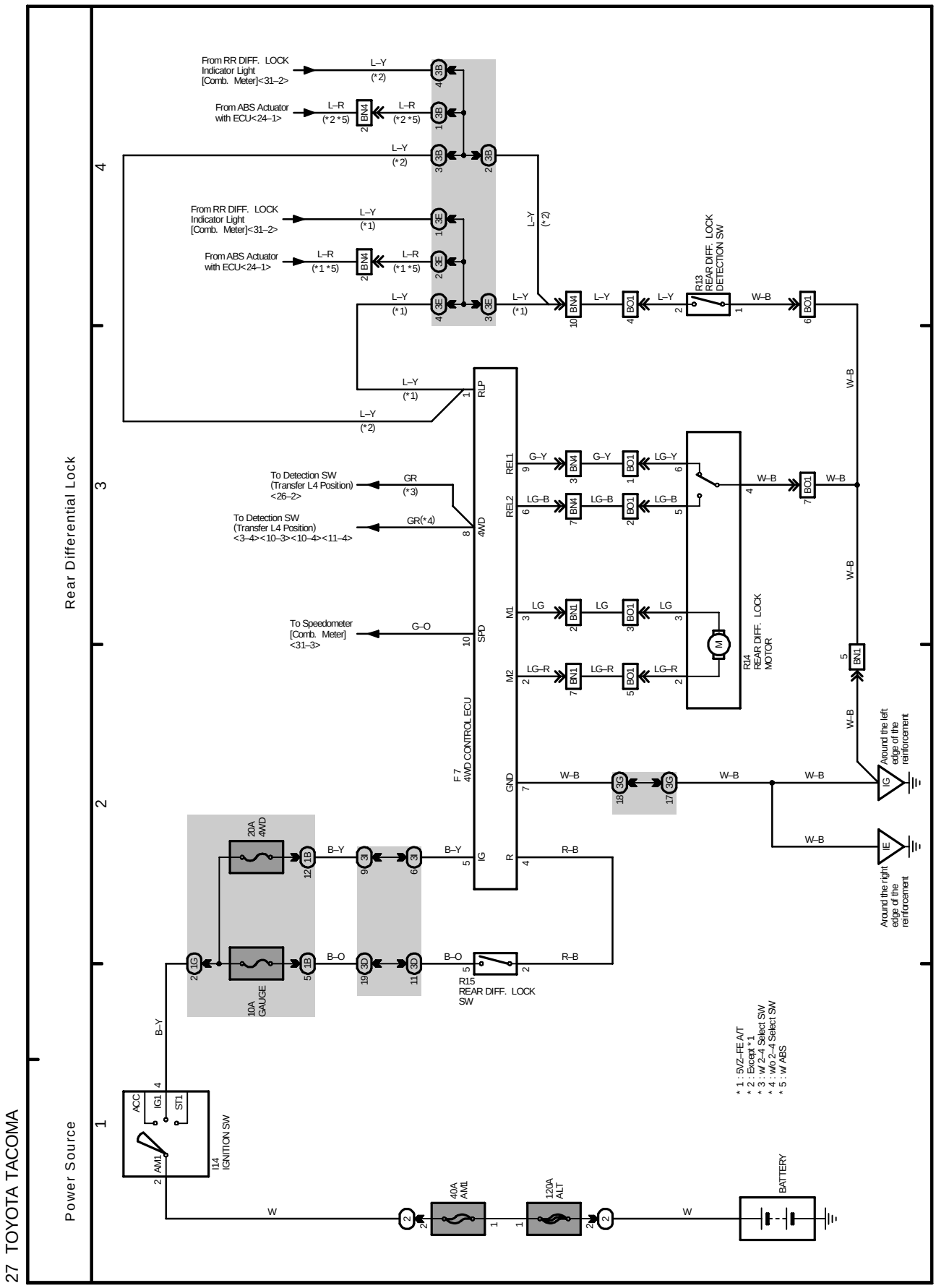
Rear Differential Lock
Power Source
From RR DIFF. LOCK Indicator Light [Comb. Meter]<31–2>
From ABS Actuator with ECU<24–1>
To Detection SW (Transfer L4 Position) <26–2>
To Detection SW (Transfer L4 Position) <3–4><10–3><10–4><11–4>
To Speedometer [Comb. Meter] <31–3>
R13 REAR DIFF. LOCK DETECTION SW
R14 REAR DIFF. LOCK MOTOR
F 7 4WD CONTROL ECU
R15 REAR DIFF. LOCK SW
I14 IGNITION SW
20A 4WD
10A GAUGE
40A AM1
120A ALT
BATTERY
Around the left edge of the reinforcement
Around the right edge of the reinforcement
* 1 : 5VZ–FE A/T
* 2 : Except * 1
* 3 : w/ 2–4 Select SW
* 4 : w/o 2–4 Select SW
* 5 : w/ ABS

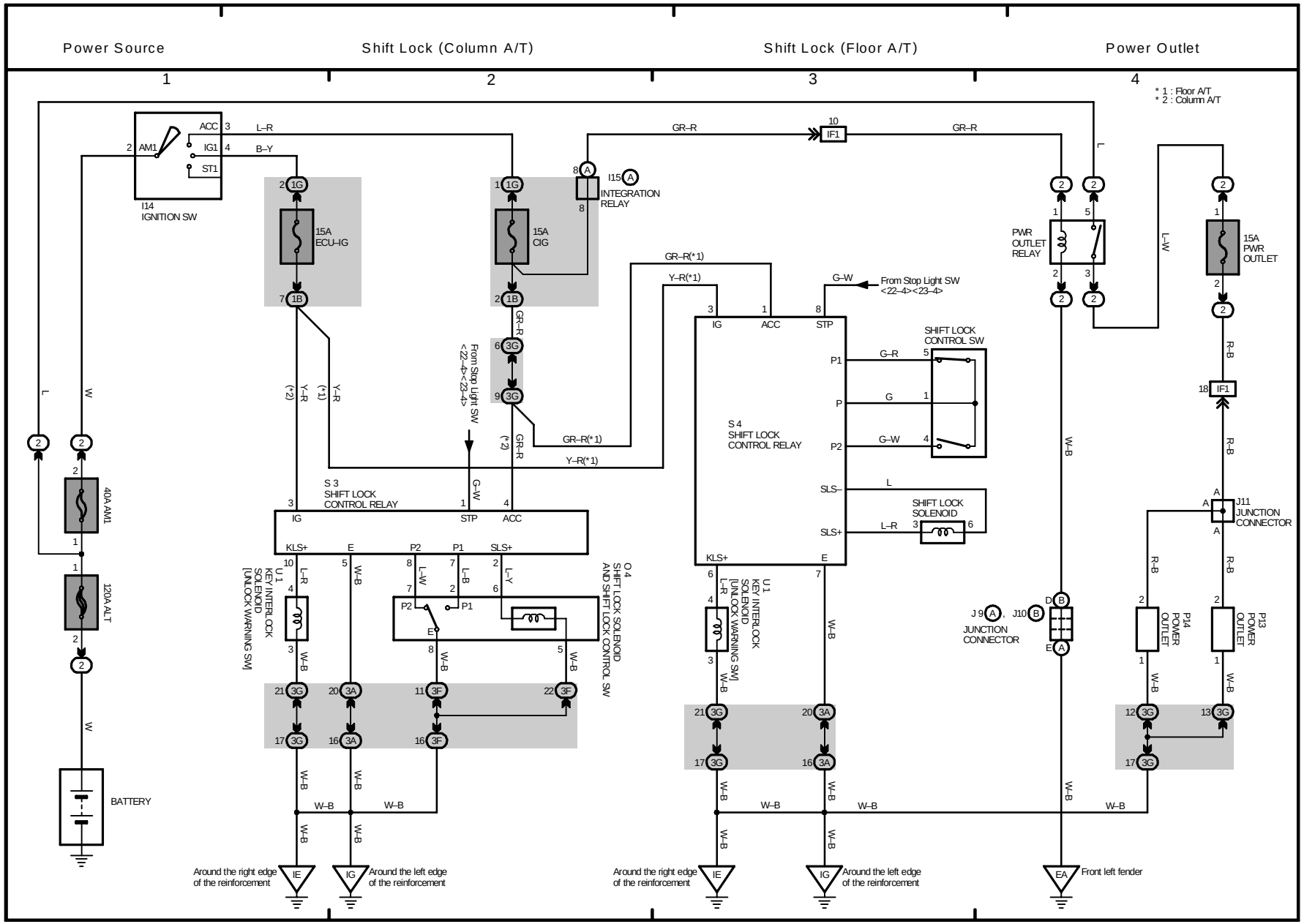
Power Source
Shift Lock (Column A/T)
Shift Lock (Floor A/T)
Power Outlet
1
2
3
4
* 1 : Floor A/T
* 2 : Column A/T
I14
IGNITION SW
ACC
IG1
ST1
AM1
L–R
B–Y
15A
ECU–IG
15A
CIG
I15
INTEGRATION
RELAY
IF1
GR–R
PWR
OUTLET
RELAY
L–W
15A
PWR
OUTLET
From Stop Light SW
<22–4><23–4>
GR–R(*1)
Y–R(*1)
G–W
SHIFT LOCK
CONTROL SW
S 4
SHIFT LOCK
CONTROL RELAY
SHIFT LOCK
SOLENOID
S 3
SHIFT LOCK
CONTROL RELAY
IG
STP
ACC
KLS+
E
P2
P1
SLS+
SLS–
U 1
KEY INTERLOCK
SOLENOID
[UNLOCK WARNING SW]
O 4
SHIFT LOCK SOLENOID
AND SHIFT LOCK CONTROL SW
J11
JUNCTION
CONNECTOR
J 9
J10
JUNCTION
CONNECTOR
P14
POWER
OUTLET
P13
POWER
OUTLET
40A AM1
120A ALT
BATTERY
W–B
R–B
Y–R
Around the right edge
of the reinforcement
Around the left edge
of the reinforcement
Front left fender

M

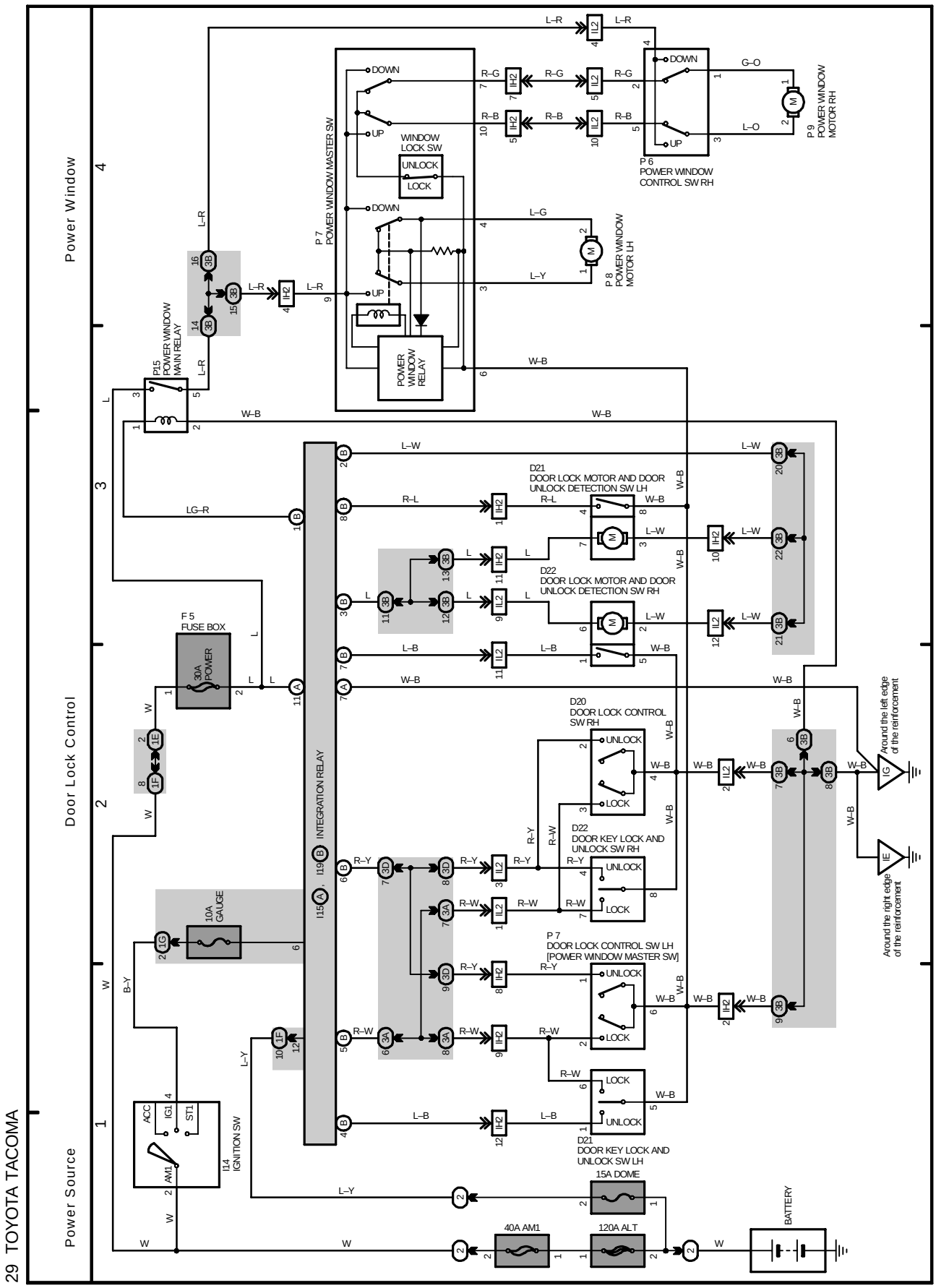
Power Window
Door Lock Control
Power Source
P 6
POWER WINDOW
CONTROL SW RH
P 9
POWER WINDOW
MOTOR RH
P 7
POWER WINDOW MASTER SW
WINDOW
LOCK SW
UNLOCK
LOCK
DOWN
UP
POWER
WINDOW
RELAY
P 8
POWER WINDOW
MOTOR LH
P15
POWER WINDOW
MAIN RELAY
D21
DOOR LOCK MOTOR AND DOOR
UNLOCK DETECTION SW LH
D22
DOOR LOCK MOTOR AND DOOR
UNLOCK DETECTION SW RH
F 5
FUSE BOX
30A
POWER
10A
GAUGE
INTEGRATION RELAY
D20
DOOR LOCK CONTROL
SW RH
D22
DOOR KEY LOCK AND
UNLOCK SW RH
P 7
DOOR LOCK CONTROL SW LH
[POWER WINDOW MASTER SW]
D21
DOOR KEY LOCK AND
UNLOCK SW LH
I14
IGNITION SW
ACC
IG1
ST1
AM1
15A DOME
40A AM1
120A ALT
BATTERY
Around the left edge
of the reinforcement
Around the right edge
of the reinforcement

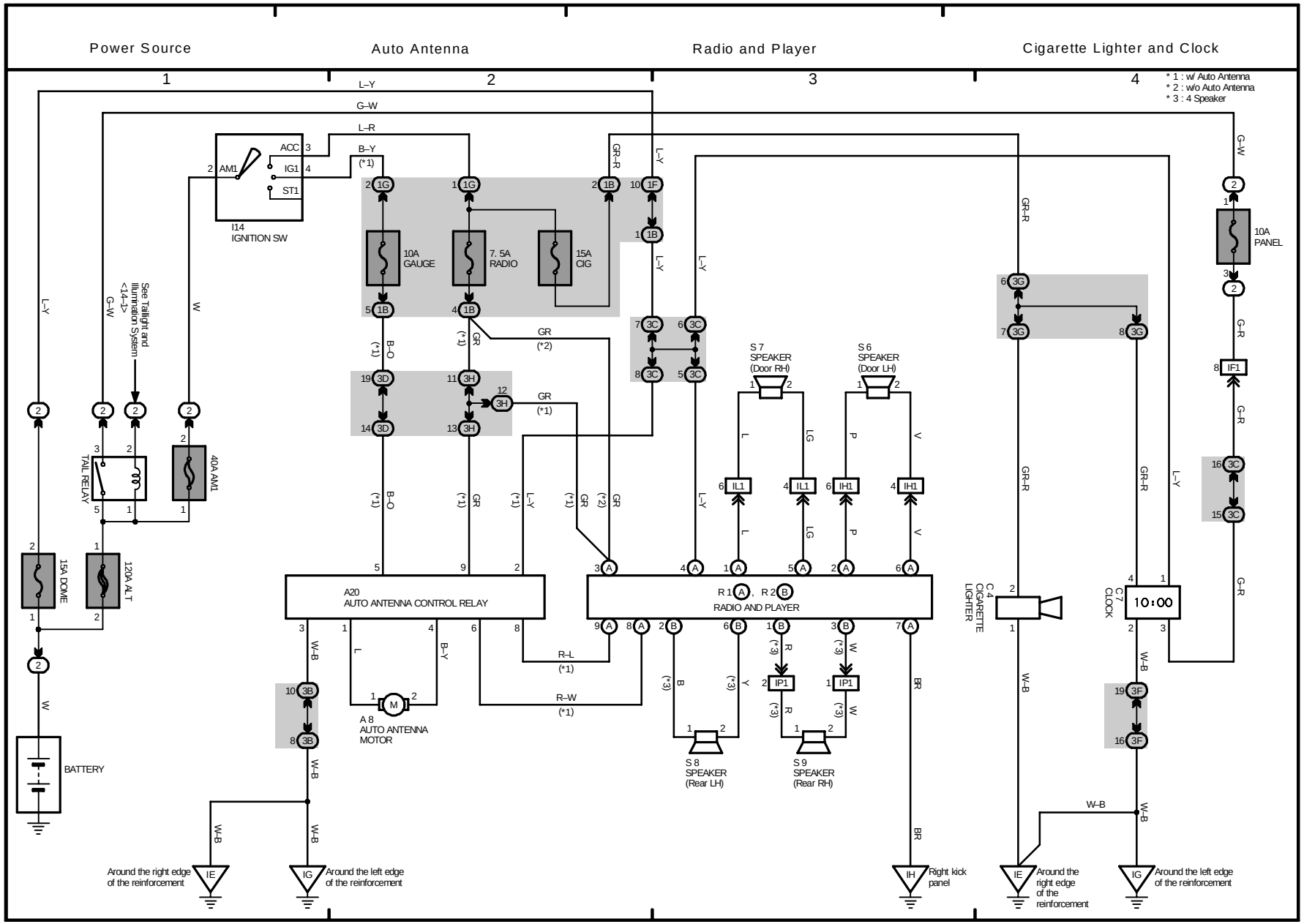
Power Source
Auto Antenna
Radio and Player
Cigarette Lighter and Clock
1
2
3
4
* 1 : w/ Auto Antenna
* 2 : w/o Auto Antenna
* 3 : 4 Speaker
L–Y
G–W
L–R
B–Y
(*1)
ACC
IG1
ST1
AM1
I14
IGNITION SW
10A
GAUGE
7. 5A
RADIO
15A
CIG
GR–R
GR
(*2)
(*1)
B–O
See Taillight and Illumination System <14–1>
TAIL RELAY
40A AM1
15A DOME
120A ALT
BATTERY
W
A20
AUTO ANTENNA CONTROL RELAY
A 8
AUTO ANTENNA MOTOR
R–L
R–W
W–B
Around the right edge of the reinforcement
Around the left edge of the reinforcement
S 7
SPEAKER
(Door RH)
S 6
SPEAKER
(Door LH)
IL1
IH1
IP1
R 1
R 2
RADIO AND PLAYER
S 8
SPEAKER
(Rear LH)
S 9
SPEAKER
(Rear RH)
BR
Right kick panel
C 4
CIGARETTE LIGHTER
C 7
CLOCK
10:00
10A
PANEL
IF1
Around the right edge of the reinforcement
Around the left edge of the reinforcement

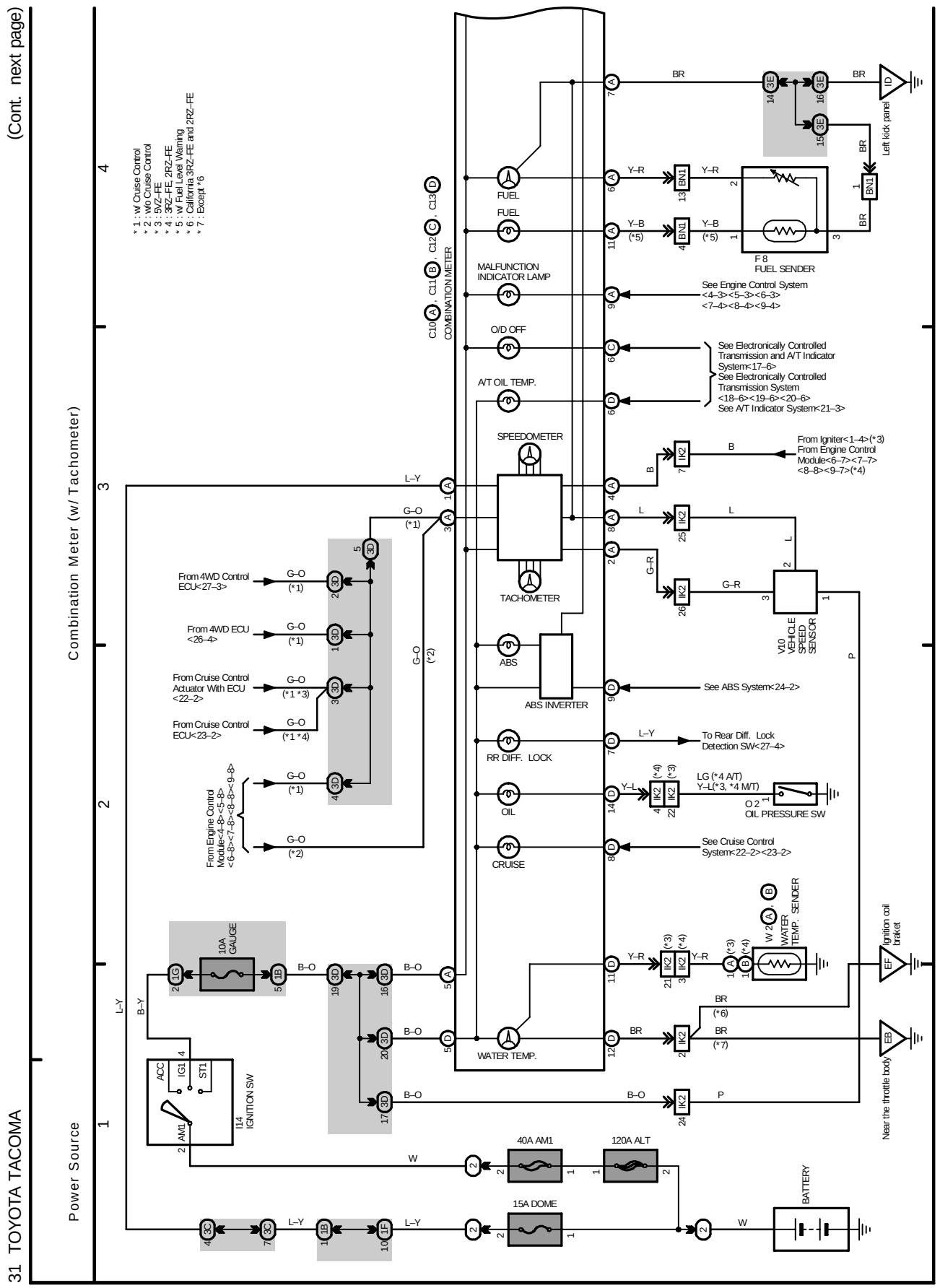
(Cont. next page)
Combination Meter (w/ Tachometer)
Power Source
* 1 : w/ Cruise Control
* 2 : w/o Cruise Control
* 3 : 5VZ–FE
* 4 : 3RZ–FE, 2RZ–FE
* 5 : w/ Fuel Level Warning
* 6 : California 3RZ–FE and 2RZ–FE
* 7 : Except *6
C10 A, C11 B, C12 C, C13 D
COMBINATION METER
FUEL
MALFUNCTION INDICATOR LAMP
O/D OFF
A/T OIL TEMP.
SPEEDOMETER
TACHOMETER
ABS
ABS INVERTER
RR DIFF. LOCK
OIL
CRUISE
WATER TEMP.
See Engine Control System <4–3><5–3><6–3> <7–4><8–4><9–4>
See Electronically Controlled Transmission and A/T Indicator System<17–6>
See Electronically Controlled Transmission System <18–6><19–6><20–6>
See A/T Indicator System<21–3>
From Igniter<1–4>(*3)
From Engine Control Module<6–7><7–7> <8–8><9–7>(*4)
See ABS System<24–2>
To Rear Diff. Lock Detection SW<27–4>
LG (*4 A/T)
Y–L(*3, *4 M/T)
O 2 1
OIL PRESSURE SW
See Cruise Control System<22–2><23–2>
F 8
FUEL SENDER
Left kick panel
V10 VEHICLE SPEED SENSOR
W 2 A, B
WATER TEMP. SENDER
Ignition coil braket
Near the throttle body
From 4WD Control ECU<27–3>
From 4WD ECU <26–4>
From Cruise Control Actuator With ECU <22–2>
From Cruise Control ECU<23–2>
From Engine Control Module<4–8><5–8> <6–8><7–8><8–8><9–8>
10A GAUGE
I14 IGNITION SW
ACC
IG1
ST1
AM1
40A AM1
120A ALT
15A DOME
BATTERY

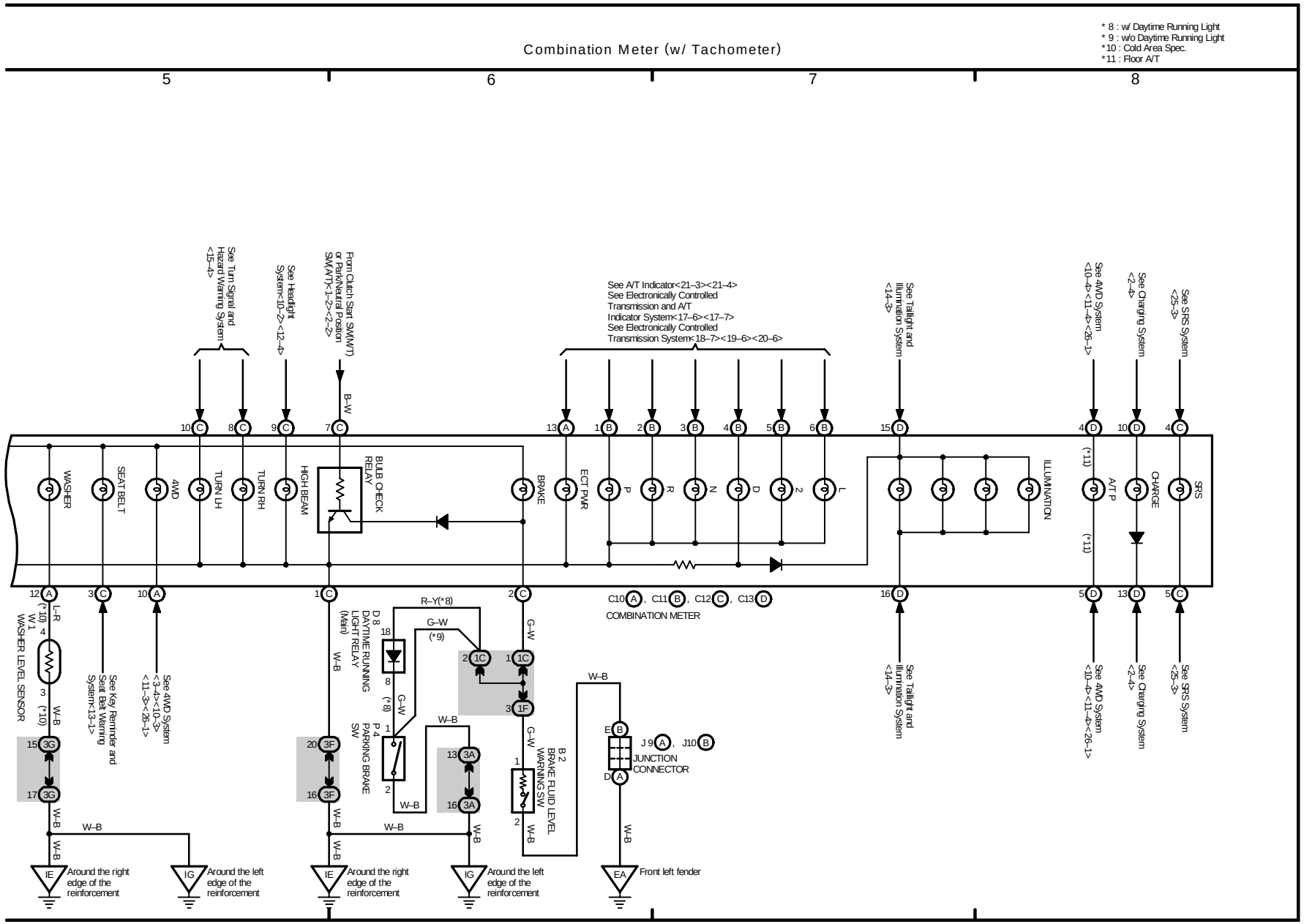
Combination Meter (w/ Tachometer)
* 8 : w/ Daytime Running Light
* 9 : w/o Daytime Running Light
*10 : Cold Area Spec.
*11 : Floor A/T
5
6
7
8
See Turn Signal and Hazard Warning System <15–4>
See Headlight System<10–2><12–4>
From Clutch Start SW(M/T) or Park/Neutral Position SW(A/T)<1–2><2–2>
See A/T Indicator<21–3><21–4>
See Electronically Controlled Transmission and A/T Indicator System<17–6><17–7>
See Electronically Controlled Transmission System<18–7><19–6><20–6>
See Taillight and Illumination System <14–3>
See 4WD System <10–4><11–4><26–1>
See Charging System <2–4>
See SRS System <25–3>
B–W
WASHER
SEAT BELT
4WD
TURN LH
TURN RH
HIGH BEAM
BULB CHECK RELAY
BRAKE
ECT PWR
P
R
N
D
2
L
ILLUMINATION
A/T P
CHARGE
SRS
(*11)
C10 A, C11 B, C12 C, C13 D
COMBINATION METER
L–R
W 1
WASHER LEVEL SENSOR
(*10)
W–B
See Key Reminder and Seat Belt Warning System<13–1>
See 4WD System <3–4><10–3><11–3><26–1>
D 8
DAYTIME RUNNING LIGHT RELAY (Main)
R–Y(*8)
G–W
(*9)
(*8)
P 4
PARKING BRAKE SW
B 2
BRAKE FLUID LEVEL WARNING SW
J 9 A, J10 B
JUNCTION CONNECTOR
Around the right edge of the reinforcement
Around the left edge of the reinforcement
Front left fender

M OVERALL ELECTRICAL WIRING DIAGRAM

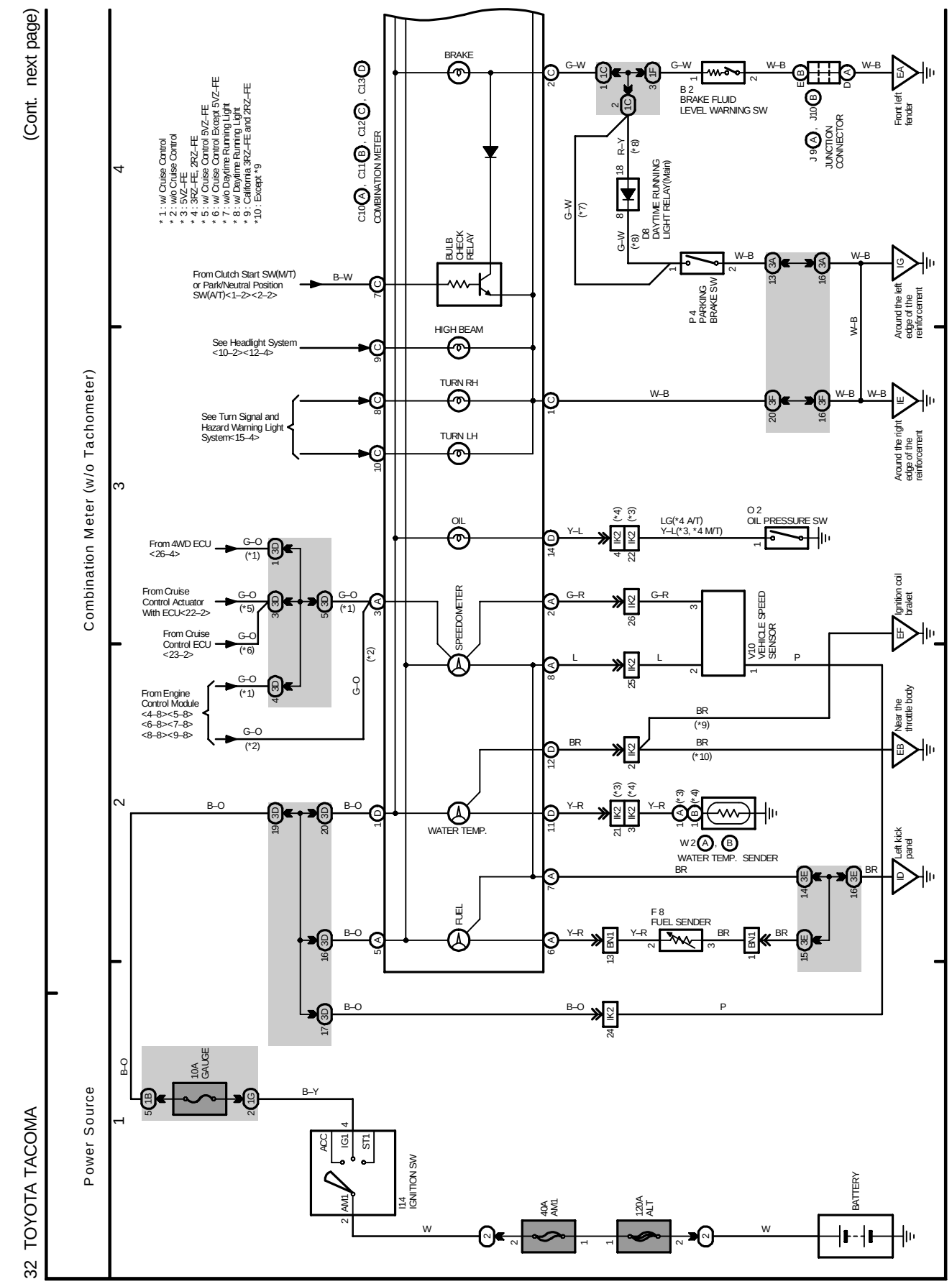

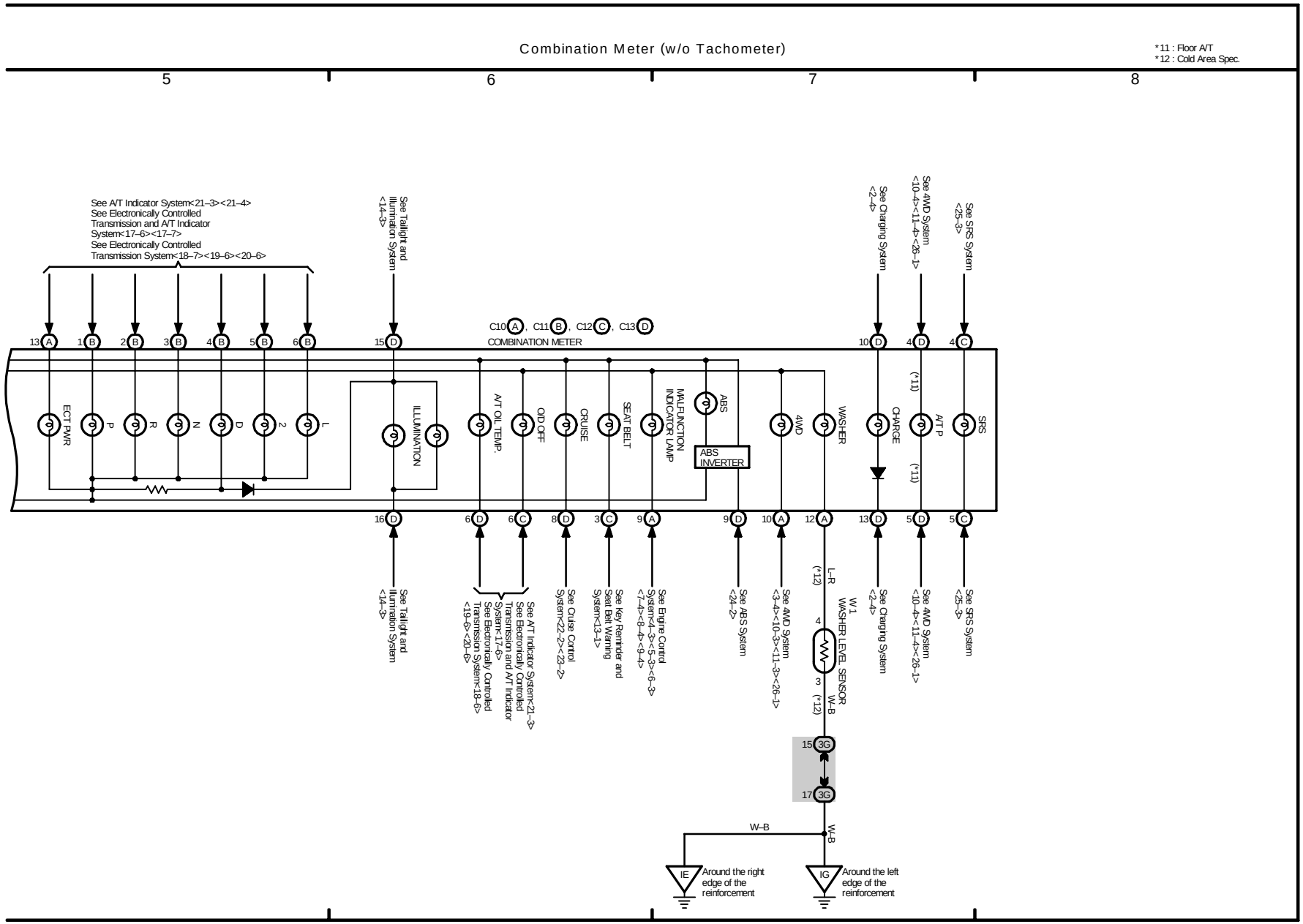
Combination Meter (w/o Tachometer)
*11 : Floor A/T
*12 : Cold Area Spec.
5
6
7
8
See A/T Indicator System<21–3><21–4>
See Electronically Controlled Transmission and A/T Indicator System<17–6><17–7>
See Electronically Controlled Transmission System<18–7><19–6><20–6>
See Taillight and Illumination System <14–3>
See Charging System <2–4>
See 4WD System <10–4><11–4><26–1>
See SRS System <25–3>
C10 A, C11 B, C12 C, C13 D
COMBINATION METER
ECT PWR
P
R
N
D
2
L
ILLUMINATION
A/T OIL TEMP.
O/D OFF
CRUISE
SEAT BELT
MALFUNCTION INDICATOR LAMP
ABS
ABS INVERTER
4WD
WASHER
CHARGE
A/T P
SRS
(*11)
See Taillight and Illumination System <14–3>
See A/T Indicator System<21–3> See Electronically Controlled Transmission and A/T Indicator System<17–6> See Electronically Controlled Transmission System<18–6> <19–6><20–6>
See Cruise Control System<22–2><23–2>
See Key Reminder and Seat Belt Warning System<13–1>
See Engine Control System<4–3><5–3><6–3> <7–4><8–4><9–4>
See ABS System <24–2>
See 4WD System <3–4><10–3><11–3><26–1>
L–R (*12)
W 1
WASHER LEVEL SENSOR
W–B (*12)
See Charging System <2–4>
See 4WD System <10–4><11–4><26–1>
See SRS System <25–3>
W–B
IE
Around the right edge of the reinforcement
IG
Around the left edge of the reinforcement

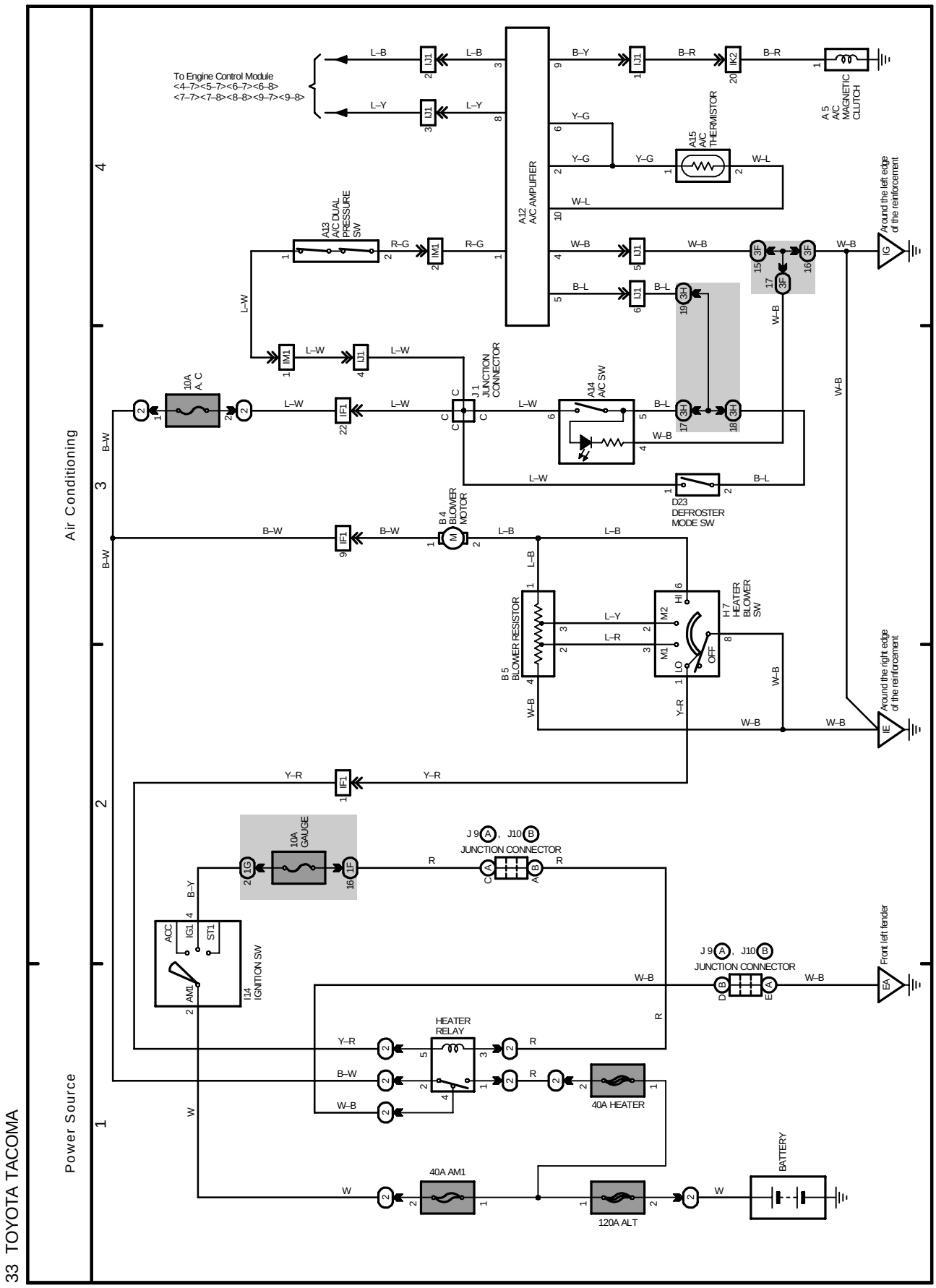
Air Conditioning
Power Source
To Engine Control Module
<4–7><5–7><6–7><6–8>
<7–7><7–8><8–8><9–7><9–8>
A12 A/C AMPLIFIER
A13 A/C DUAL PRESSURE SW
A15 A/C THERMISTOR
A 5 A/C MAGNETIC CLUTCH
A14 A/C SW
J 1 JUNCTION CONNECTOR
D23 DEFROSTER MODE SW
B 4 BLOWER MOTOR
B 5 BLOWER RESISTOR
H 7 HEATER BLOWER SW
10A A/C
10A GAUGE
J 9 , J10 JUNCTION CONNECTOR
I 14 IGNITION SW
HEATER RELAY
40A HEATER
40A AM1
120A ALT
BATTERY
Around the left edge of the reinforcement
Around the right edge of the reinforcement
Front left fender